can-am®

ATV Product Spec Book 2024

ATV Vehicles, Accessories and Parts & Maintenance

TABLE OF CONTENTS

ATV Accessory Compatibility Guide 5

FEATURED PACKAGES

2024 Outlander X xc 1000R 7
2024 Outlander X xc 1000T ABS 8
2024 Outlander MAX DPS 1000 T ABS 9
2024 Outlander MAX XU+ 1000 T 10
2024 Outlander MAX XT-P 1000 T ABS 11
2024 Outlander X mr 1000R 12
2024 Outlander 6x6 XU+ 450 T 13
2024 Outlander 6x6 XU+ 650 T 14
2024 Outlander 6x6 XU+ 1000 T 15
2024 Outlander MAX 6x6 XU+ 450 T 16
2024 Outlander MAX 6x6 XU+ 650 T 17
2024 Outlander MAX 6x6 XU+ 100 T 18
2024 Renegade 110 EFI 19
2024 Renegade X xc 110 EFI 20
2024 Renegade X xc 1000 T ABS 21

G2, G2L, G2S ACCESSORIES 22

FEATURED PACKAGES

2024 Outlander PRO HD5 T 65
2024 Outlander PRO XU HD5 66
2024 Outlander PRO XU HD5 T 67
2024 OutlanderPRO XU H7 68
2024 Outlander PRO XU HD7 T 69
2024 Outlander PRO XU HD7 T ABS 70
2024 Outlander MAX PRO XU HD7 T 71
2024 Outlander MAX DPS 500 T ABS 72
2024 Outlander MAX DPS 700 T ABS 73
2024 Outlander MAX XT 700 T ABS 74
2024 Outlander X mr 700 75

G3L ACCESSORIES 79

PARTS AND MAINTENANCE 106

CANAMOFFROAD.COM

© 2023 Bombardier Recreational Products Inc. (BRP). All rights reserved. ®, TM and the BRP logo are trademarks of BRP or its affiliates. †All other trademarks are the property of their respective owners. BRP reserves the right to discontinue or change specifications, prices, designs, features, models or equipment without incurring obligation. Some models depicted may include optional equipment. Products performance may vary depending on weather, temperature, altitude, driving ability and driver/passenger weight. BRP recommends that all ATV-SSV drivers take a training course. See your dealer. ATVs and SSVs can be hazardous to operate. Never exceed the ATV-SSV's passenger capacity. All adult model ATV are meant to be used by drivers aged 16 and older. Carefully read the vehicle's operator's guide. Follow all instructional and safety material and observe applicable laws and regulations. ATVs and SSVs are primarily designed for use on unpaved surfaces (off-road); avoid paved surfaces. For your safety, the operator and passenger(s) must wear a helmet, eye protection and applicable protective clothing. Always remember that riding, alcohol and drugs don't mix. Never engage in stunt driving. Avoid excessive speed and be particularly careful on difficult terrain. Always ride responsibly and safely. See your authorised BRP dealer for details and visit https://can-am.brp.com.

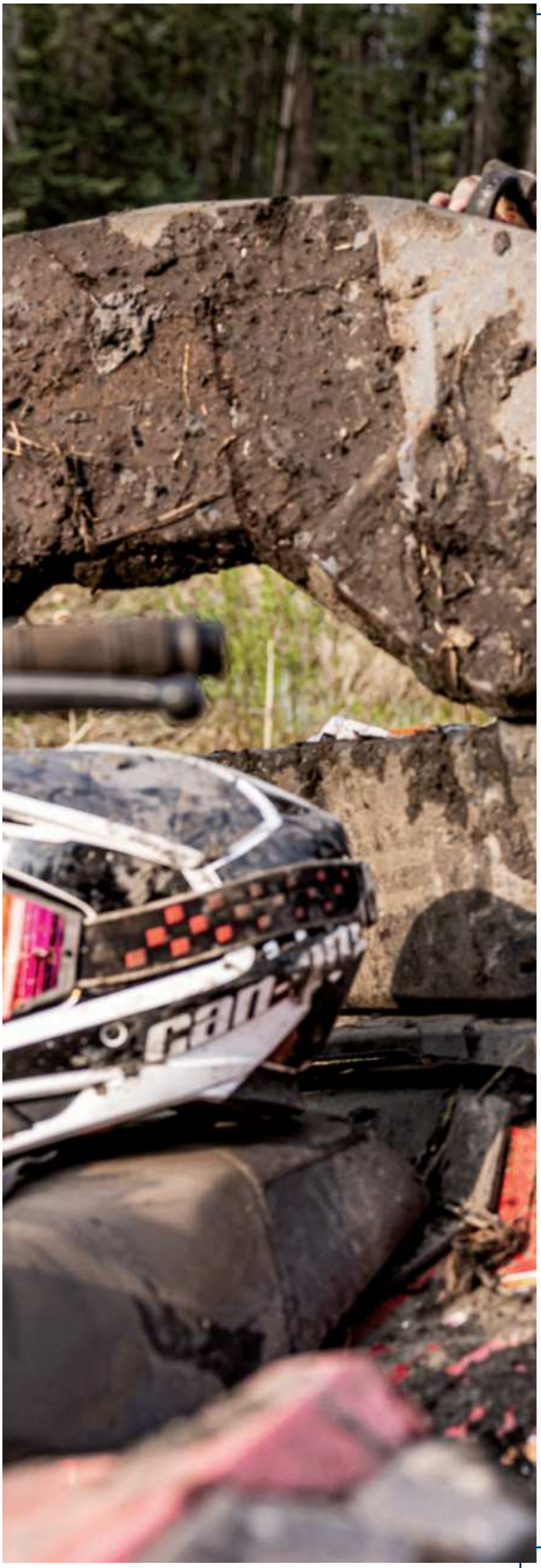

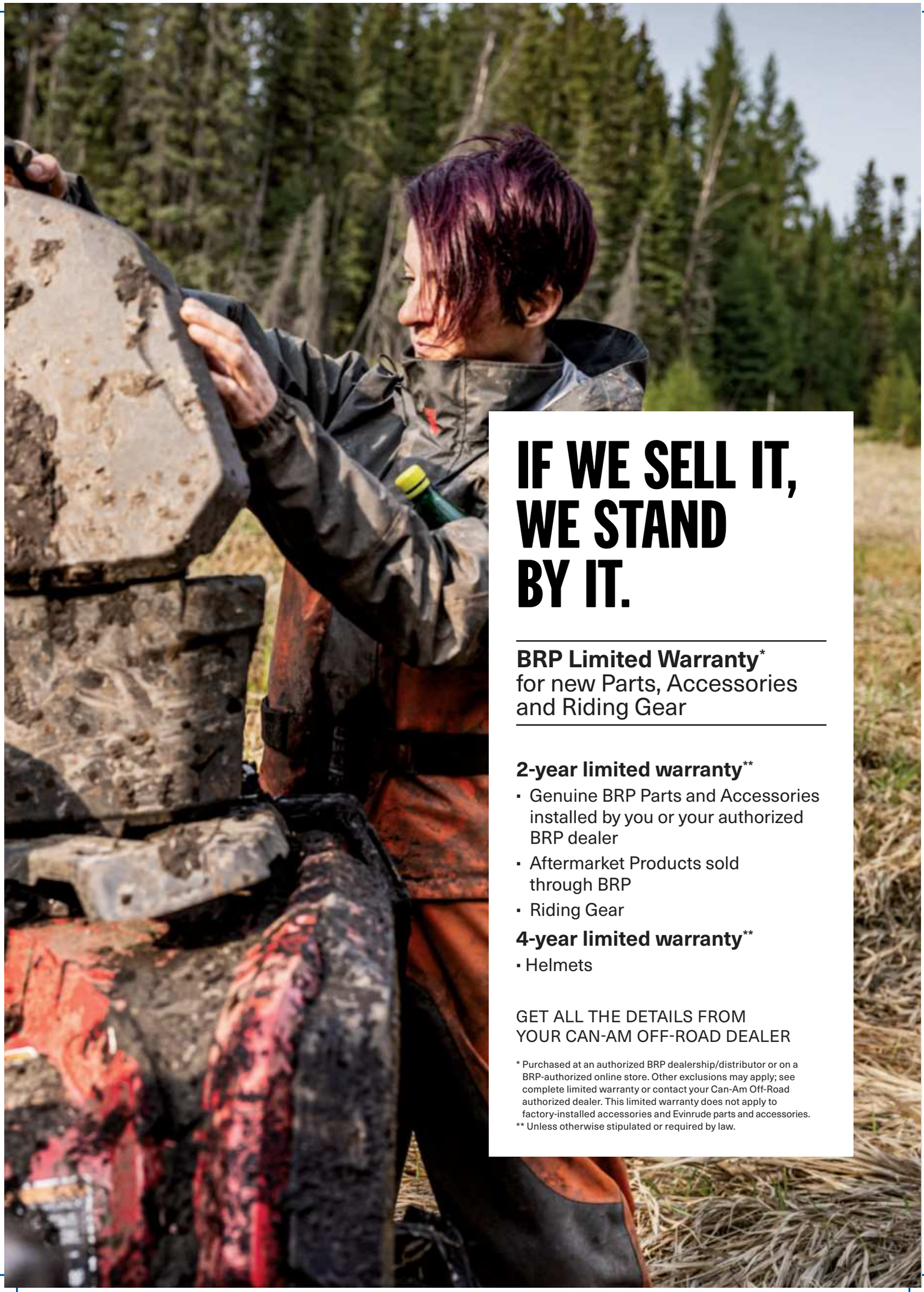

IF WE SELL IT, WE STAND BY IT.

BRP Limited Warranty*
for new Parts, Accessories and Riding Gear

2-year limited warranty**

- Genuine BRP Parts and Accessories installed by you or your authorized BRP dealer
- Aftermarket Products sold through BRP
- Riding Gear

4-year limited warranty**

- Helmets

GET ALL THE DETAILS FROM YOUR CAN-AM OFF-ROAD DEALER

* Purchased at an authorized BRP dealership/distributor or on a BRP-authorized online store. Other exclusions may apply; see complete limited warranty or contact your Can-Am Off-Road authorized dealer. This limited warranty does not apply to factory-installed accessories and Evinrude parts and accessories.
** Unless otherwise stipulated or required by law.

CUSTOMIZING MADE EASY

1. Select the model.
2. Select the package.
3. Customize color, engine, and accessories (or accessory bundles) for your vehicle.
4. Click “Save” or “Send to dealer.”

If you can dream it, you can build it. And ride it. Creating a Can-Am vehicle tailor-made for our riders’ needs has never been easier. Scan the QR code and follow the step-by-step above.

BUILD YOURS NOW

We’ve made things super simple.

- Check your model year
- Choose engine and model
- Learn your **PLATFORM CODE**

This **PLATFORM CODE** will let you know at a glance if the accessory is compatible with your vehicle.

ATV ACCESSORY COMPATIBILITY GUIDE

Model year	Model	Engine configuration	Platform code
2015	Outlander L	450, 500	G2L
	Outlander	500, 650, 800, 1000	G2
	Outlander L MAX	450, 500	G2L
	Outlander MAX	500, 650, 800, 1000	G2
	6x6	650, 1000	G2
	Renegade	500, 800, 1000	G2S
2016	Outlander L	450, 570	G2L
	Outlander	570, 650, 850, 1000	G2
	Outlander L MAX	450, 570	G2L
	Outlander MAX	570, 650, 850, 1000	G2
	6x6	650, 1000	G2
	Renegade	570, 850, 1000	G2S
2017 2018	Outlander	450, 570	G2L
	Outlander	650, 850, 1000	G2
	Outlander MAX	450, 570	G2L
	Outlander MAX	650, 850, 1000	G2
	6x6	650, 1000	G2
	Renegade	570, 850, 1000	G2S
2019 2020 2021 2022 2023 2024	Outlander	450, 570	G2L
	Outlander	650, 850, 1000R	G2
	Outlander MAX	450, 570	G2L
	Outlander MAX	650, 850, 1000R	G2
	6x6	450	G2L
	6x6	650, 1000	G2
	Renegade	570, 650, 850, 1000R	G2S
	Outlander	500, 700	G3L
	Outlander PRO	HD5, HD7	G3L

G2L 6x6

G2 6x6

G2

G2L

G2S

G3L

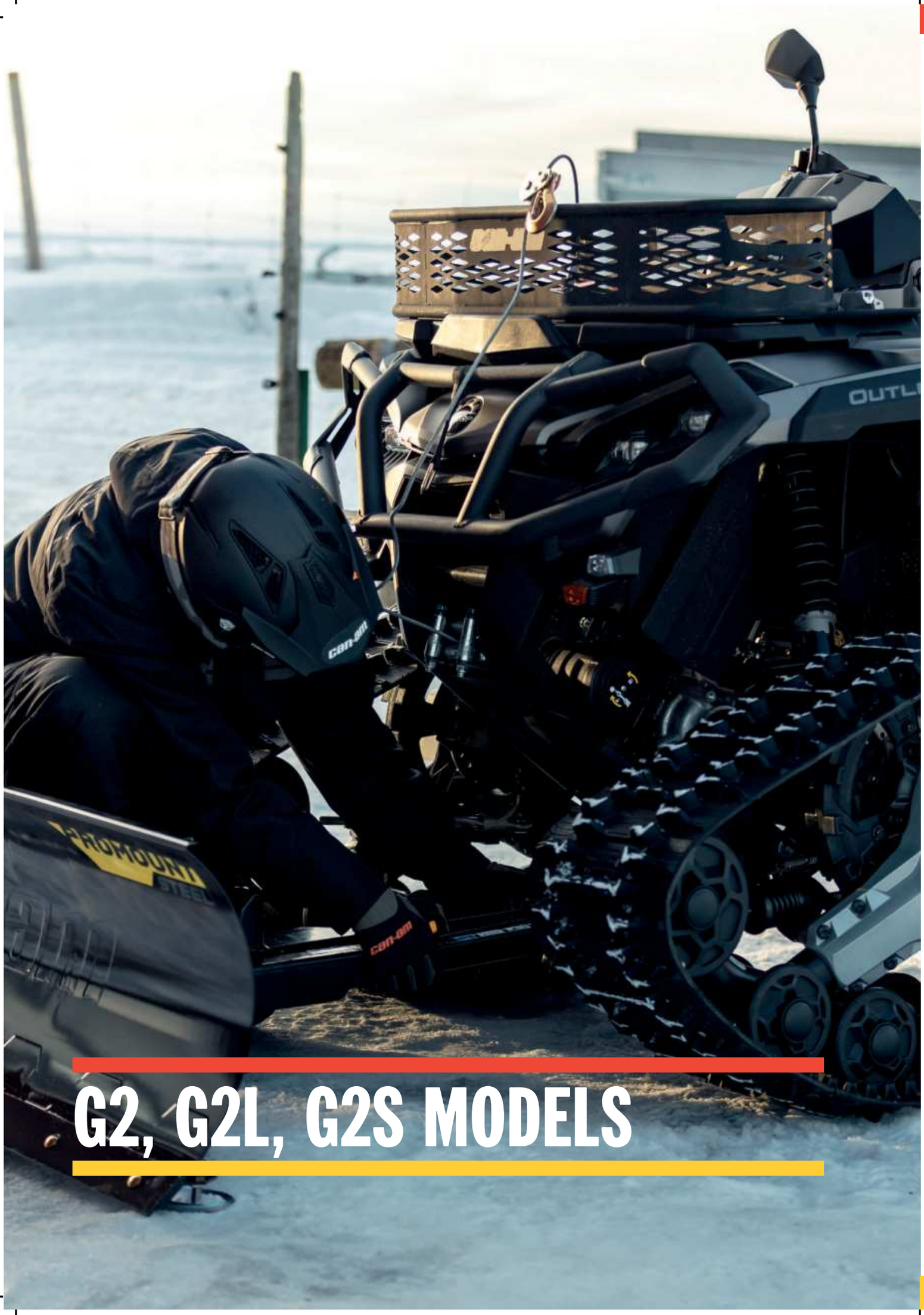

G2, G2L, G2S MODELS

MY24 OUTLANDER X xc 1000R

Not sold in Finland or Norway.

Chalk Gray & Can-Am Red

HIGHLIGHTS

- Tri-Mode Dynamic Power Steering (DPS)
- Visco-4Lok front differential
- FOX† PODIUM† 1.5 RC2 shocks
- A-arms HMWPE protectors
- 14 in. (35.6 cm) cast-aluminum beadlock wheels
- 26 in. (66 cm) ITP Terracross radial tires
- Front, center & footwell aluminum skid plates
- Aluminum sport bumper with aluminum pre-runner and top brace
- Aluminum taper-profile handlebar with full wrap handguards
- Painted plastics for premium look
- 7.6 in wide digital display

ENGINE	
Type	68 k W (91 hp), Rotax® 976 cc V-twin, liquid cooled
Fuel Delivery System	Intelligent Throttle Control (iTC™) with Electronic Fuel Injection (EFI)
Transmission	CVT L / H / N / R / P
Drive Train	Selectable 2WD / 4WD / Lock 4WD with Visco-4Lok front differential
Driving Assistance	Work / Standard / Sport modes Intelligent Engine Braking (iEB™)
Power Steering	Tri-Mode Dynamic Power Steering (DPS)
Speed Category	Over 60 km/h

SUSPENSIONS	
Front Suspension	Arched double A-arm with front sway bar 9.2 in. (23.3 cm) travel
Front Shocks	FOX† 1.5 PODIUM† RC2
Rear Suspension	Torsional Trailing arm Independent (TTI) 9.9 in. (25.1 cm) travel
Rear Shocks	FOX† 1.5 PODIUM† RC2

TIRES / WHEELS	
Front & Rear Tires	ITP† Terracross 26 x 8/10 x 14 in. (66 x 20.3 / 25.4 x 35.6 cm)
Wheels	14-in. (35.6 cm) cast-aluminum beadlock

BRAKES	
Front	Dual 214 mm disc brakes with hydraulic twin-piston calipers
Rear	Single 214 mm disc brake with hydraulic twin-piston caliper

DIMENSIONS / CAPACITIES	
Estimated Dry Weight *	836 lb (379 kg)
L x W x H	86 x 48 x 49.5 in. (218.4 x 121.9 x 126 cm)
Wheelbase	51 in. (129.5 cm)
Ground Clearance	11 in. (27.9 cm)
Seat Height	34.5 in. (87.7 cm)
Rack Capacity	Rear: 200 lb (90 kg)
Storage Capacity	5.7 gal (21.4 L)
Towing Capacity	1,650 lb (750 kg)
Fuel Capacity	5.4 gal (20.5 L)

FEATURES	
Gauge	7.6 in wide digital display
Instrumentation	DC Outlet, 15-A connector
Ingnition	RF Digitally Encoded Security System (D.E.S.S.™)
Lighting	LED headlights
Winch	Prewired for available winch
Seat	Standard
Handlebar	Aluminum taper-profile handlebar with full wrap handguards
Protection	Aluminum front bumper with pre-runner and top brace Front, center & footwell aluminum skid plates A-arms HMWPE protectors Mudguards

WARRANTY	
Factory warranty	2-year BRP limited warranty

MY24 OUTLANDER X XC 1000 T ABS

Chalk Gray & Can-Am Red

HIGHLIGHTS

- Tri-Mode Dynamic Power Steering (DPS)
- Anti-Lock Braking System (ABS)
- Visco-4Lok front differential
- FOX† PODIUM† 1.5 RC2 shocks
- A-arms MWPE protectors
- 14 in. (35.6 cm) cast-aluminum beadlock wheels
- 26 in. (66 cm) ITP Terracross radial tires
- Front, center & footwell aluminum skid plates
- Aluminum taper-profile handlebar with full wrap handguards
- Painted plastics for premium look
- 7.6 in wide digital display

ENGINE	
Type	60 kW (80 hp), Rotax® 976 cc V-twin, liquid cooled
Fuel Delivery System	Intelligent Throttle Control (iTC™) with Electronic Fuel Injection (EFI)
Transmission	CVT L / H / N / R / P
Drive Train	Selectable 2WD / 4WD / Lock 4WD modes with Brake Traction Control (BTC)
Driving Assistance	ECO / Standard / Sport modes Intelligent Engine Braking (iEB™)
Power Steering	Tri-Mode Dynamic Power Steering (DPS)
Speed Category	More than 60 km/h

SUSPENSIONS	
Front Suspension	Arched double A-arm with front sway bar 9.2 in. (23.3 cm) travel
Front Shocks	FOX† 1.5 PODIUM† RC2
Rear Suspension	Torsional Trailing arm Independent (TTI) 9.9 in. (25.1 cm) travel
Rear Shocks	FOX† 1.5 PODIUM† RC2

TIRES / WHEELS	
Front Tires	ITP† Terracross 26 x 8 x 14 in. (66 x 20.3 x 35.6 cm)
Rear Tires	ITP† Terracross 26 x 10 x 14 in. (66 x 25.4 x 35.6 cm)
Wheels	14 in. (35.6 cm) cast-aluminum beadlock

BRAKES	
Front	Dual 214 mm disc brakes with hydraulic twin-piston calipers
Rear	Single 214 mm disc brake with hydraulic twin-piston caliper

DIMENSIONS / CAPACITIES	
Estimated Dry Weight*	853.6 lb (387.2 kg)
L x W x H	87 x 48 x 58.7 in. (218.4 x 121.9 x 149.1 cm)
Wheelbase	51 in. (129.5 cm)
Ground Clearance	11 in. (27.9 cm)
Seat Height	34.5 in. (87.7 cm)
Rack Capacity	Front: 100 lb (45 kg) / Rear: 200 lb (90 kg)
Storage Capacity	5.7 gal (21.4 L)
Towing Capacity	750 kg trailer with brakes and 335 kg trailer without brakes
Fuel Capacity	5.4 gal (20.5 L)

FEATURES	
Gauge	7.6 in wide digital display
Instrumentation	DC Outlet, 15-A connector
Ingnition	RF Digitally Encoded Security System (D.E.S.S.™)
Lighting	LED headlights
Winch	N/A
T-Category features	Towing hitch with trailer plug, directional indicators, position lamps, mirrors, horn
Seat	Standard
Handlebar	Aluminum taper-profile handlebar with full wrap handguards
Protection	Front, center & footwell aluminum skid plates A-arms HMWPE protectors Mudguards

WARRANTY	
Factory warranty	2-year BRP limited warranty

MY24 OUTLANDER MAX DPS 1000 T ABS

Legion Red

HIGHLIGHTS

- Tri-Mode Dynamic Power Steering (DPS)
- Anti-Lock Braking System (ABS)
- 14 in. (35.6 cm) cast-aluminum wheels
- 26 in. (66 cm) ITP Terracross radial tires
- Heavy-duty front bumper

ENGINE	
Type	60 kW (80 hp), Rotax® 976 cc V-twin, liquid cooled
Fuel Delivery System	Intelligent Throttle Control (iTC™) with Electronic Fuel Injection (EFI)
Transmission	CVT L / H / N / R / P
Drive Train	Selectable 2WD / 4WD modes with Brake Traction Control (BTC)
Driving Assistance	Work / Standard / Sport modes Intelligent Engine Braking (iEB™)
Power Steering	Tri-Mode Dynamic Power Steering (DPS)
Speed Category	More than 60 km/h

SUSPENSIONS	
Front Suspension	Arched double A-arm with front sway bar 9.2 in. (23.3 cm) travel
Front Shocks	Twin tube
Rear Suspension	Torsional Trailing arm Independent (TTI) 9.9 in. (25.1 cm) travel
Rear Shocks	Twin tube

TIRES / WHEELS	
Front & Rear Tires	ITP† Terracross 26 x 8/10 x 14 in. (66 x 20.3 / 25.4 x 35.6 cm)
Wheels	14 in. (35.6 cm) cast-aluminum

BRAKES	
Front	Dual 214 mm disc brakes with hydraulic twin-piston calipers
Rear	Single 214 mm disc brake with hydraulic twin-piston caliper

DIMENSIONS / CAPACITIES	
Estimated Dry Weight *	901.6 lb (409 kg)
L x W x H	94 x 48 x 62.2 in. (238.8 x 121.9 x 158 cm)
Wheelbase	59 in. (149.9 cm)
Ground Clearance	11 in. (27.9 cm)
Seat Height	34.5 in. (87.7 cm)
Rack Capacity	Front: 100 lb (45 kg) / Rear: 200 lb (90 kg)
Storage Capacity	5.7 gal (21.4 L)
Towing Capacity	1,650 lb (750 kg) trailer with brakes and 740 lb (335 kg) trailer without brakes
Fuel Capacity	5.4 gal (20.5 L)

FEATURES	
Gauge	4.5 in. digital display
Instrumentation	DC outlet, 15-A connector
Ingnition	RF Digitally Encoded Security System (D.E.S.S.™)
Lighting	LED headlights
Winch	N/A
T-Category features	Towing hitch with trailer plug, directional indicators, position lamps, mirrors, horn
Seat	Convertible Rack System (CRS)
Handlebar	Standard
Protection	Heavy-Duty front bumper Mudguards

WARRANTY	
Factory warranty	2-year BRP limited warranty

MY24 OUTLANDER MAX XU+ 1000 T

Platinum Satin

HIGHLIGHTS

- Tri-Mode Dynamic Power Steering (DPS)
- Visco-4Lok† front differential
- 26 in. (66 cm) Carlisle ACT HD 6-ply tires
- 12 in. (30.5 cm) cast-aluminum wheels
- Heavy-duty front bumper
- 3,500-lb (1,588 kg) winch
- Heated grips and throttle
- Speed limiter

ENGINES	1000
Type	60 kW (80 hp), Rotax® 976 cc V-twin, liquid cooled
Fuel Delivery System	Intelligent Throttle Control (iTC™) with Electronic Fuel Injection (EFI)
Transmission	CVT Extra low L / H / N / R / P
Drive Train	Selectable 2WD / 4WD / Lock 4WD with Visco-4Lok front differential
Driving Assistance	Work / Standard / Sport modes Intelligent Engine Braking (iEB™) Speed limiter
Power Steering	Tri-Mode Dynamic Power Steering (DPS)
Speed Category	Up to 60 km/h

SUSPENSIONS	
Front Suspension	Arched double A-arm with front sway bar 9.2 in. (23.3 cm) travel
Front Shocks	Twin tube
Rear Suspension	Torsional Trailing arm Independent (TTI) 9.9 in. (25.1 cm) travel
Rear Shocks	Twin tube

TIRES / WHEELS	
Front & Rear Tires	Carlisle† ACT HD 26 x 8/10 x 12 in. (66 x 20.3 / 25.4 x 30.5 cm)
Wheels	12 in. (30.5 cm) cast-aluminum

BRAKES	
Front	Dual 214 mm disc brakes with hydraulic twin-piston calipers
Rear	Single 214 mm disc brake with hydraulic twin-piston caliper

DIMENSIONS / CAPACITIES	1000
Estimated Dry Weight *	954 lb (433 kg)
L x W x H	94 x 48 x 62.2 in. (238.8 x 121.9 x 158 cm)
Wheelbase	59 in. (149.9 cm)
Ground Clearance	12 in. (30.5 cm)
Seat Height	34.5 in. (87.7 cm)
Rack Capacity	Front: 100 lb (45 kg) / Rear: 200 lb (90 kg)
Storage Capacity	5.7 gal (21.4 L)
Towing Capacity	1,650 lb (750 kg) trailer with brakes and 740 lb (335 kg) trailer without brakes
Fuel Capacity	5.4 gal (20.5 L)

FEATURES	
Gauge	4.5 in. digital display
Instrumentation	DC outlet, 15-A connector
Ingnition	RF Digitally Encoded Security System (D.E.S.S.™)
Lighting	LED headlights
Winch	3,500-lb (1,588 kg) winch
T-Category features	Towing hitch with trailer plug, directional indicators, position lamps, mirrors, horn
Seat	Reinforced seat skin Convertible Rack System (CRS)
Handlebar	Standard with heated grips & throttle
Protection	Heavy-duty front bumper Mudguards

WARRANTY	
Factory warranty	2-year BRP limited warranty

MY24 OUTLANDER MAX XT-P 1000 T ABS

Hyper Silver & Neo Yellow

HIGHLIGHTS

- Tri-Mode Dynamic Power Steering (DPS)
- Anti-Lock Braking System (ABS)
- Visco-4Lok front differential
- FOX† 1.5 PODIUM† QS3 shocks
- 14 in. (35.6 cm) cast-aluminum beadlock wheels
- 26 in. (66 cm) ITP Terracross radial tires
- Heavy-duty front and rear bumpers
- Painted plastics for premium look
- 3,500-lb (1,588 kg) winch
- Aluminum taper-profile handlebar with full wrap handguards
- 7.6 in. wide digital display

ENGINE	
Type	60 kW (80 hp), Rotax® 976 cc V-twin, liquid cooled
Fuel Delivery System	Intelligent Throttle Control (iTC™) with Electronic Fuel Injection (EFI)
Transmission	CVT L / H / N / R / P
Drive Train	Selectable 2WD / 4WD / Lock 4WD modes with Brake Traction Control (BTC)
Driving Assistance	Work / Standard / Sport modes Intelligent Engine Braking (iEB™)
Power Steering	Tri-Mode Dynamic Power Steering (DPS)
Speed Category	More than 60 km/h

SUSPENSIONS	
Front Suspension	Arched double A-arm with front sway bar 9.2 in. (23.3 cm) travel
Front Shocks	FOX† 1.5 PODIUM† QS3
Rear Suspension	Torsional Trailing arm Independent (TTI) 9.9 in. (25.1 cm) travel
Rear Shocks	FOX† 1.5 PODIUM† QS3

TIRES / WHEELS	
Front & Rear Tires	ITP† Terracross 26 x 8/10 x 14 in. (66 x 20.3 / 25.4 x 35.6 cm)
Wheels	14 in. (35.6 cm) cast-aluminum beadlock

BRAKES	
Front	Dual 214 mm disc brakes with hydraulic twin-piston calipers
Rear	Single 214 mm disc brake with hydraulic twin-piston caliper

DIMENSIONS / CAPACITIES	
Estimated Dry Weight *	901.6 lb (409 kg)
L x W x H	94 x 48 x 62.2 in. (238.8 x 121.9 x 158 cm)
Wheelbase	59 in. (149.9 cm)
Ground Clearance	11 in. (27.9 cm)
Seat Height	34.5 in. (87.7 cm)
Rack Capacity	Front: 100 lb (45 kg) / Rear: 200 lb (90 kg)
Storage Capacity	5.7 gal (21.4 L)
Towing Capacity	1,650 lb (750 kg) trailer with brakes and 740 lb (335 kg) trailer without brakes
Fuel Capacity	5.4 gal (20.5 L)

FEATURES	
Gauge	7.6 in wide digital display
Instrumentation	DC outlet, 15-A connector
Ingnition	RF Digitally Encoded Security System (D.E.S.S.™)
Lighting	LED headlights
Winch	3,500-lb (1,588 kg) winch
T-Category features	Towing hitch with trailer plug, directional indicators, position lamps, mirrors, horn
Seat	Convertible Rack System (CRS)
Handlebar	Aluminum taper-profile handlebar with full wrap handguards
Protection	Heavy-duty front & rear bumpers Mudguards

WARRANTY	
Factory warranty	2-year BRP limited warranty

MY24 OUTLANDER X MR 1000R

Not sold in Norway or Sweden.

Hyper Silver & Legion Red

HIGHLIGHTS

- Rotax® snorkeled V-Twin engine with relocated CVT intake and outlet
- Relocated radiator
- Continuously Variable Transmission (CVT) with extra low L-gear
- Tri-Mode Dynamic Power Steering (DPS)
- Visco-4Lok front differential
- Front and rear gas shocks
- 14 in. (35.6 cm) cast-aluminum wheels
- 30 in. (76.6 cm) ITP Cryptid† tires
- Heavy-duty front and rear bumpers
- 3,500-lb (1,588 kg) winch
- Mud-riding footrests
- 59 in. (149.9 cm) wheelbase
- X-package coloration, graphics and seat cover

ENGINE	
Type	68 k W (91 hp), Rotax® 976 cc V-twin, snorkeled, liquid cooled with relocated radiator
Fuel Delivery System	Intelligent Throttle Control (iTC™) with Electronic Fuel Injection (EFI)
Transmission	CVT Extra low L / H / N / R / P
Drive Train	Selectable 2WD / 4WD / Lock 4WD with Visco-4Lok front differential
Driving Assistance	ECO / Standard / Sport modes Intelligent Engine Braking (iEB™)
Power Steering	Tri-Mode Dynamic Power Steering (DPS)
Speed Category	Over 60 km/h

SUSPENSIONS	
Front Suspension	Arched double A-arm with front sway bar
Front Shocks	Showa Gas shock
Rear Suspension	Torsional Trailing arm Independent (TTI)
Rear Shocks	Showa Gas shock

TIRES / WHEELS	
Front & Rear Tires	ITP† Cryptid 30 x 9/9 x 14 in. (76.6 x 22.9 / 22.9 x 35.6 cm)
Wheels	14-in. (35.6 cm) cast-aluminum

BRAKES	
Front	Dual 214 mm disc brakes with hydraulic twin-piston calipers
Rear	Single 214 mm disc brake with hydraulic twin-piston caliper

DIMENSIONS / CAPACITIES	
Estimated Dry Weight *	1,013 lb (459 kg)
L x W x H	97 x 50 x 51.5 in. (246 x 127 x 131 cm)
Wheelbase	59 in. (149.9 cm)
Ground Clearance	13 in. (33 cm)
Seat Height	36.75 in. (93.3 cm)
Rack Capacity	Rear: 200 lb (90 kg)
Storage Capacity	5.7 gal (21.4 L)
Towing Capacity	1,650 lb (750 kg)
Fuel Capacity	5.4 gal (20.5 L)

FEATURES	
Gauge	7.6 in wide digital display
Instrumentation	DC Outlet, 15-A connector
Ingnition	RF Digitally Encoded Security System (D.E.S.S.™)
Lighting	LED headlights
Winch	3,500-lb (1,588 kg) winch
Seat	Standard
Handlebar	Standard
Protection	Heavy-duty front & rear bumpers Mud-riding footrests Mudguards

WARRANTY	
Factory warranty	2-year BRP limited warranty

MY24 OUTLANDER 6X6 XU+ 450 T

Tundra Green

HIGHLIGHTS

- Selectable 4WD / 6WD front differential
- Tri-Mode Dynamic Power Steering (DPS)
- Continuously Variable Transmission (CVT) with extra low L-gear
- 12 in. (30.5 cm) cast-aluminum wheels
- 26 in. (66 cm) Carlisle† ACT HD 6-Ply tires
- 3,500-lb (1,588 kg) winch
- Heavy-duty front bumper
- Heated grips and throttle
- Rear bed with cargo extenders
- Speed limiter

ENGINE	
Type	28 kW (38 hp), Rotax® 427 cc single cylinder, liquid cooled
Fuel Delivery System	Intelligent Throttle Control (iTC™) with Electronic Fuel Injection (EFI)
Transmission	CVT Extra low L / H / N / R / P
Drive Train	Selectable 4WD / 6WD with Visco-Lok† QE auto-locking front differential
Power Steering	Tri-Mode Dynamic Power Steering (DPS)
Speed Category	Up to 60 km/h

SUSPENSIONS	
Front Suspension	Double A-arm 9 in. (22.9 cm) travel
Front Shocks	Twin tube
Rear Suspension	Double Torsional Trailing arm Independent (TTI2) with quick-release sway bar 8.8 in. (22.4 cm) travel
Rear Shocks	Twin tube

TIRES / WHEELS	
Front Tires	Carlisle† ACT HD 26 x 8 x 12 in. (66 x 20.3 x 30.5 cm)
Rear Tires	Carlisle† ACT HD 26 x 10 x 12 in. (66 x 25.4 x 30.5 cm)
Wheels	12-in. (30.5 cm) cast-aluminum

BRAKES	
Front	Dual 214 mm disc brakes with hydraulic twin-piston calipers
Rear	Single 214 mm disc brake with hydraulic twin-piston caliper

DIMENSIONS / CAPACITIES	
Estimated Dry Weight *	443 kg
L x W x H	279 x 118.8 x 147.4 cm
Wheelbase	208 cm
Ground Clearance	26.7 cm
Seat Height	85.8 cm
Rack Capacity	Front: 54 kg / Rear: 159 kg
Storage Capacity	2.9 gal (10.9 L)
Towing Capacity	2,000 lb (907 kg) trailer with brakes and 1,250 lb (465 kg) trailer without brakes
Fuel Capacity	5.4 gal (20.5 L)

FEATURES	
Gauge	4.5 in. digital display
Instrumentation	DC Outlet, 15-A connector
Ingnition	Mechanical key
Lighting	70 W headlights
Winch	3,500-lb (1,588 kg) winch
T-Category features	Towing hitch with trailer plug, directional indicators, position lamps, mirrors, horn
Seat	Reinforced seat skin
Handlebar	Standard with heated grips & throttle
Protection	Heavy-Duty front bumper

WARRANTY	
Factory warranty	2-year BRP limited warranty

MY24 OUTLANDER 6X6 XU+ 650 T

Tundra Green

HIGHLIGHTS

- Selectable 4WD / 6WD with Visco-4Lok† auto-locking front differential
- Tri-Mode Dynamic Power Steering (DPS)
- Continuously Variable Transmission (CVT) with extra low L-gear
- 14 in. (35.6 cm) aluminum wheels
- 26 in. (66 cm) ITP Terracross tires
- 3,500-lb (1,588 kg) winch
- Dump dual-level cargo box with modular accessories
- Heated grips and throttle
- RF Digitally Encoded Security System (D.E.S.S.™)
- Speed limiter

ENGINE	650
Type	44 kW (59 hp), Rotax® 650 cc V-twin, liquid cooled
Fuel Delivery System	Intelligent Throttle Control (iTC™) with Electronic Fuel Injection (EFI)
Transmission	CVT Extra low L / H / N / R / P
Drive Train	Selectable 4WD / 6WD / Lock 4WD with Visco-4Lok front differential
Driving Assistance	Work / Standard / Sport modes Intelligent Engine Braking (iEB™) Speed limiter
Power Steering	Tri-Mode Dynamic Power Steering (DPS)
Speed Category	Up to 60 km/h

SUSPENSIONS	
Front Suspension	Arched double A-arm with front sway bar 9.2 in. (23.3 cm) travel
Front Shocks	Twin tube
Rear Suspension	Double Torsional Trailing arm Independent (TTI2) with quick-release sway bar 9.9 in. (25.1 cm) travel
Rear Shocks	Twin tube

TIRES / WHEELS	
Front & Rear Tires	ITP† Terracross 26 x 8/10 x 14 in. (66 x 20.3 / 25.4 x 35.6 cm)
Wheels	14 in. (35.6 cm) cast-aluminum

BRAKES	
Front	Dual 214 mm disc brakes with hydraulic twin-piston calipers
Rear	Dual 214 mm disc brakes with hydraulic twin-piston calipers

DIMENSIONS / CAPACITIES	
Estimated Dry Weight *	574 kg
L x W x H	297 x 122 x 149.4 cm
Wheelbase	208 cm
Ground Clearance	27.9 cm
Seat Height	87.7 cm
Rack Capacity	Front: 45 kg / Rear: 318 kg
Storage Capacity	Dual-level cargo box with sidewalls and tailgate Rear: 18.5 gal (70 L)
Towing Capacity	2,000 lb (907 kg) trailer with brakes and 1,486 lb (674 kg) trailer without brakes
Fuel Capacity	5.4 gal (20.5 L)

FEATURES	
Gauge	4.5 in. digital display
Instrumentation	DC Outlet, 15-A connector
Ingnition	RF Digitally Encoded Security System (D.E.S.S.™)
Lighting	LED headlights
Winch	3,500-lb (1,588 kg) winch
T-Category features	Towing hitch with trailer plug, directional indicators, position lamps, mirrors, horn
Seat	Reinforced seat skin
Handlebar	Standard with heated grips & throttle
Protection	Heavy-duty front bumper

WARRANTY	
Factory warranty	2-year BRP limited warranty

MY24 OUTLANDER 6X6 XU+ 1000 T

Boreal Green

HIGHLIGHTS

- Selectable 4WD / 6WD with Visco-4Lok† auto-locking front differential
- Tri-Mode Dynamic Power Steering (DPS)
- Continuously Variable Transmission (CVT) with extra low L-gear
- 14 in. (35.6 cm) aluminum wheels
- 26 in. (66 cm) ITP Terracross tires
- 3,500-lb (1,588 kg) winch
- Dump dual-level cargo box with modular accessories
- Heated grips and throttle
- Speed limiter
- RF Digitally Encoded Security System (D.E.S.S.™)
- Painted plastics for premium look

ENGINE	1000
Type	60 kW (80 hp), Rotax® 976 cc V-twin, liquid cooled
Fuel Delivery System	Intelligent Throttle Control (iTC™) with Electronic Fuel Injection (EFI)
Transmission	CVT Extra low L / H / N / R / P
Drive Train	Selectable 4WD / 6WD / Lock 4WD with Visco-4Lok front differential
Driving Assistance	Work / Standard / Sport modes Intelligent Engine Braking (iEB™) Speed limiter
Power Steering	Tri-Mode Dynamic Power Steering (DPS)
Speed Category	Up to 60 km/h

SUSPENSIONS	
Front Suspension	Arched double A-arm with front sway bar 9.2 in. (23.3 cm) travel
Front Shocks	Twin tube
Rear Suspension	Double Torsional Trailing arm Independent (TTI2) with quick-release sway bar 9.9 in. (25.1 cm) travel
Rear Shocks	Twin tube

TIRES / WHEELS	
Front & Rear Tires	ITP† Terracross 26 x 8/10 x 14 in. (66 x 20.3 / 25.4 x 35.6 cm)
Wheels	14 in. (35.6 cm) cast-aluminum

BRAKES	
Front	Dual 214 mm disc brakes with hydraulic twin-piston calipers
Rear	Dual 214 mm disc brakes with hydraulic twin-piston calipers

DIMENSIONS / CAPACITIES	
Estimated Dry Weight *	576 kg
L x W x H	297 x 122 x 149.4 cm
Wheelbase	208 cm
Ground Clearance	27.9 cm
Seat Height	87.7 cm
Rack Capacity	Front: 45 kg / Rear: 318 kg
Storage Capacity	Dual-level cargo box with sidewalls and tailgate Rear: 18.5 gal (70 L)
Towing Capacity	2,000 lb (907 kg) trailer with brakes and 1,486 lb (674 kg) trailer without brakes
Fuel Capacity	5.4 gal (20.5 L)

FEATURES	
Gauge	4.5 in. digital display
Instrumentation	DC Outlet, 15-A connector
Ingnition	RF Digitally Encoded Security System (D.E.S.S.™)
Lighting	LED headlights
Winch	3,500-lb (1,588 kg) winch
T-Category features	Towing hitch with trailer plug, directional indicators, position lamps, mirrors, horn
Seat	Reinforced seat skin
Handlebar	Standard with heated grips & throttle
Protection	Heavy-duty front bumper

WARRANTY	
Factory warranty	2-year BRP limited warranty

MY24 OUTLANDER MAX 6X6 XU+ 450 T

Tundra Green

HIGHLIGHTS

- Selectable 4WD / 6WD front differential
- Tri-Mode Dynamic Power Steering (DPS)
- Continuously Variable Transmission (CVT) with extra low L-gear
- 12 in. (30.5 cm) cast-aluminum wheels
- 26 in. (66 cm) Carlisle† ACT HD 6-Ply tires
- 3,500-lb (1,588 kg) winch
- Heavy-duty front bumper
- Heated grips and throttle
- Rear bed with cargo extenders
- RF Digitally Encoded Security System (D.E.S.S.™)
- Speed limiter

ENGINE	
Type	28 kW (38 hp), Rotax® 427 cc single cylinder, liquid cooled
Fuel Delivery System	Intelligent Throttle Control (iTC™) with Electronic Fuel Injection (EFI)
Transmission	CVT Extra low L / H / N / R / P
Drive Train	Selectable 4WD / 6WD with Visco-Lok† QE auto-locking front differential
Driving Assistance	Speed limiter
Power Steering	Tri-Mode Dynamic Power Steering (DPS)
Speed Category	Up to 60 km/h

SUSPENSIONS	
Front Suspension	Double A-arm 9 in. (22.9 cm) travel
Front Shocks	Twin tube
Rear Suspension	Double Torsional Trailing arm Independent (TTI2) with quick-release sway bar 8.8 in. (22.4 cm) travel
Rear Shocks	Twin tube

TIRES / WHEELS	
Front & Rear Tires	Carlisle† ACT HD 26 x 8/10 x 12 in. (66 x 20.3 / 25.4 x 30.5 cm)
Wheels	12 in. (30.5 cm) cast-aluminum

BRAKES	
Front	Dual 214 mm disc brakes with hydraulic twin-piston calipers
Rear	Single 214 mm disc brake with hydraulic twin-piston caliper

DIMENSIONS / CAPACITIES	
Estimated Dry Weight *	468 kg
L x W x H	300 x 117 x 168.4 cm
Wheelbase	228.5 cm
Ground Clearance	26.7 cm
Seat Height	85.8 cm
Rack Capacity	Front : 54 kg / Rear: 159 kg
Storage Capacity	2.9 gal (10.9 L)
Towing Capacity	2,000 lb (907 kg) trailer with brakes and 1,250 lb (465 kg) trailer without brakes
Fuel Capacity	5.4 gal (20.5 L)

FEATURES	
Gauge	4.5 in. digital display
Instrumentation	DC Outlet, 15-A connector
Ingnition	RF Digitally Encoded Security System (D.E.S.S.™)
Lighting	70 W headlights
Winch	3,500-lb (1,588 kg) winch
T-Category features	Towing hitch with trailer plug, directional indicators, position lamps, mirrors, horn
Seat	Reinforced seat skin Convertible Rack System (CRS)
Handlebar	Standard with heated grips & throttle
Protection	Heavy-duty front bumper

WARRANTY	
Factory warranty	2-year BRP limited warranty

MY24 OUTLANDER MAX 6X6 XU+ 650 T

Tundra Green

HIGHLIGHTS

- Selectable 4WD / 6WD with Visco-4Lok† auto-locking front differential
- Tri-Mode Dynamic Power Steering (DPS)
- Continuously Variable Transmission (CVT) with extra low L-gear
- 14 in. (35.6 cm) aluminum wheels
- 26 in. (66 cm) ITP Terracross tires
- 3,500-lb (1,588 kg) winch
- Dump dual-level cargo box with modular accessories
- Heated grips and throttle
- RF Digitally Encoded Security System (D.E.S.S.™)
- Speed limiter

ENGINE	650
Type	44 kW (59 hp), Rotax® 650 cc V-twin, liquid cooled
Fuel Delivery System	Intelligent Throttle Control (iTC™) with Electronic Fuel Injection (EFI)
Transmission	CVT Extra low L / H / N / R / P
Drive Train	Selectable 4WD / 6WD / Lock 4WD with Visco-4Lok front differential
Driving Assistance	Work / Standard / Sport modes Intelligent Engine Braking (iEB™) Speed limiter
Power Steering	Tri-Mode Dynamic Power Steering (DPS)
Speed Category	Up to 60 km/h

SUSPENSIONS	
Front Suspension	Arched double A-arm with front sway bar 9.2 in. (23.3 cm) travel
Front Shocks	Twin tube
Rear Suspension	Double Torsional Trailing arm Independent (TTI2) with quick-release sway bar 9.9 in. (25.1 cm) travel
Rear Shocks	Twin tube

TIRES / WHEELS	
Front & Rear Tires	ITP† Terracross 26 x 8/10 x 14 in. (66 x 20.3 / 25.4 x 35.6 cm)
Wheels	14 in. (35.6 cm) cast-aluminum

BRAKES	
Front	Dual 214 mm disc brakes with hydraulic twin-piston calipers
Rear	Dual 214 mm disc brakes with hydraulic twin-piston calipers

DIMENSIONS / CAPACITIES	
Estimated Dry Weight *	595 kg
L x W x H	317 x 123 x 163.4 cm
Wheelbase	228.5 cm
Ground Clearance	27.9 cm
Seat Height	87.7 cm
Rack Capacity	Front: 45 kg / Rear: 318 kg
Storage Capacity	Dual-level cargo box with sidewalls and tailgate Rear: 18.5 gal (70 L)
Towing Capacity	2,000 lb (907 kg) trailer with brakes and 1,486 lb (674 kg) trailer without brakes
Fuel Capacity	5.4 gal (20.5 L)

FEATURES	
Gauge	4.5 in. digital display
Instrumentation	DC Outlet, 15-A connector
Ingnition	RF Digitally Encoded Security System (D.E.S.S.™)
Lighting	LED headlights
Winch	3,500-lb (1,588 kg) winch
T-Category features	Towing hitch with trailer plug, directional indicators, position lamps, mirrors, horn
Seat	Reinforced seat skin Convertible Rack System (CRS)
Handlebar	Standard with heated grips & throttle
Protection	Heavy-Duty front bumper

WARRANTY	
Factory warranty	2-year BRP limited warranty

MY24 OUTLANDER MAX 6X6 XU+ 1000 T

Boreal Green

HIGHLIGHTS

- Selectable 4WD / 6WD with Visco-4Lok† auto-locking front differential
- Tri-Mode Dynamic Power Steering (DPS)
- Continuously Variable Transmission (CVT) with extra low L-gear
- 14 in. (35.6 cm) aluminum wheels
- 26 in. (66 cm) ITP Terracross tires
- 3,500-lb (1,588 kg) winch
- Dump dual-level cargo box with modular accessories
- Heated grips and throttle
- RF Digitally Encoded Security System (D.E.S.S.™)
- Speed limiter
- Painted plastics for premium look

ENGINE	1000
Type	60 kW (80 hp), Rotax® 976 cc V-twin, liquid cooled
Fuel Delivery System	Intelligent Throttle Control (iTC™) with Electronic Fuel Injection (EFI)
Transmission	CVT Extra low L / H / N / R / P
Drive Train	Selectable 4WD / 6WD / Lock 4WD with Visco-4Lok front differential
Driving Assistance	Work / Standard / Sport modes Intelligent Engine Braking (iEB™) Speed limiter
Power Steering	Tri-Mode Dynamic Power Steering (DPS)
Speed Category	Up to 60 km/h

SUSPENSIONS	
Front Suspension	Arched double A-arm with front sway bar 9.2 in. (23.3 cm) travel
Front Shocks	Twin tube
Rear Suspension	Double Torsional Trailing arm Independent (TTI2) with quick-release sway bar 9.9 in. (25.1 cm) travel
Rear Shocks	Twin tube

TIRES / WHEELS	
Front & Rear Tires	ITP† Terracross 26 x 8/10 x 14 in. (66 x 20.3 / 25.4 x 35.6 cm)
Wheels	14 in. (35.6 cm) cast-aluminum

BRAKES	
Front	Dual 214 mm disc brakes with hydraulic twin-piston calipers
Rear	Dual 214 mm disc brakes with hydraulic twin-piston calipers

DIMENSIONS / CAPACITIES	
Estimated Dry Weight *	597 kg
L x W x H	317 x 123 x 163.4 cm
Wheelbase	228.5 cm
Ground Clearance	27.9 cm
Seat Height	87.7 cm
Rack Capacity	Front: 45 kg / Rear: 318 kg
Storage Capacity	Dual-level cargo box with sidewalls and tailgate Rear: 18.5 gal (70 L)
Towing Capacity	2,000 lb (907 kg) trailer with brakes and 1,486 lb (674 kg) trailer without brakes
Fuel Capacity	5.4 gal (20.5 L)

FEATURES	
Gauge	4.5 in. digital display
Instrumentation	DC Outlet, 15-A connector
Ingnition	RF Digitally Encoded Security System (D.E.S.S.™)
Lighting	LED headlights
Winch	3,500-lb (1,588 kg) winch
T-Category features	Towing hitch with trailer plug, directional indicators, position lamps, mirrors, horn
Seat	Reinforced seat skin Convertible Rack System (CRS)
Handlebar	Standard with heated grips & throttle
Protection	Heavy-Duty front bumper

WARRANTY	
Factory warranty	2-year BRP limited warranty

MY24 RENEGADE 110 EFI

Catalyst Gray & Neo Yellow

HIGHLIGHTS

- For ages 10 and up
- 4-stroke engine with Electronic Fuel Injection (EFI)
- Fully automatic continuously variable transmission (CVT)
- Independent A-arm front suspension
- Electric start
- Built-in throttle limiter

ENGINE	
Type	112 cc 4-stroke single cylinder, air cooled
Fuel Delivery System	Electronic Fuel Injection (EFI) with built-in throttle limiter
Transmission	CVT, F / N / R
Drive Train	Chain driven / 2WD Electric starting system
Power Steering	N/A

SUSPENSIONS	
Front Suspension	Single A-arm 5 in. (12.7 cm) travel
Front Shocks	Twin Tube
Rear Suspension	Swingarm 6 in. (15.2 cm) travel
Rear Shocks	Twin Tube

TIRES / WHEELS	
Front Tires	19 x 7 x 8 in. (48.3 x 17.8 x 20.3 cm)
Rear Tires	18 x 9.5 x 8 in. (45.7 x 24.1 x 20.3 cm)
Wheels	8 in. (20.3 cm) steel

BRAKES	
Front	Dual drum brakes
Rear	Single drum brakes

DIMENSIONS / CAPACITIES	
Estimated Dry Weight *	295 lb (134 kg)
L x W x H	60.6 x 40.4 x 38.6 in. (154 x 103 x 98 cm)
Wheelbase	41 in. (105 cm)
Ground Clearance	8.3 in. (21.1 cm) under frame / 4.5 in. (11.4 cm) under rear axle
Seat Height	28 in. (71 cm)
Rack Capacity	N/A
Storage Capacity	N/A
Towing Capacity	N/A
Fuel Capacity	1.6 gal (6 L)

FEATURES	
Gauge	Neutral, reverse, fuel level & check engine lights
Instrumentation	N/A
Ingnition	Mechanical key
Lighting	Halogen running headlights
Winch	N/A
Seat	Standard
Handlebar	Ergonomy & controls sized for 10 years old and up
Protection	Front bumper

WARRANTY	
Factory warranty	2-year BRP limited warranty

MY24 RENEGADE X xc 110 EFI

Black & Legion Red

HIGHLIGHTS

- For ages 10 and up
- 4-stroke engine with Electronic Fuel Injection (EFI)
- Fully automatic continuously variable transmission (CVT)
- High performance gas shocks
- Double A-arm front suspension
- Electric start
- Built-in throttle limiter
- Sport handguards
- X xc package graphics

ENGINE	
Type	112 cc 4-stroke single cylinder, air cooled
Fuel Delivery System	Electronic Fuel Injection (EFI) with built-in throttle limiter
Transmission	CVT, F / N / R
Drive Train	Chain driven / 2WD Electric starting system
Power Steering	N/A

SUSPENSIONS	
Front Suspension	Double A-arm 5.5 in. (14 cm) travel
Front Shocks	Twin Tube
Rear Suspension	Swingarm 6 in. (15.2 cm) travel
Rear Shocks	Twin Tube

TIRES / WHEELS	
Front Tires	19 x 7 x 8 in. (48.3 x 17.8 x 20.3 cm)
Rear Tires	18 x 9.5 x 8 in. (45.7 x 24.1 x 20.3 cm)
Wheels	8 in. (20.3 cm) steel

BRAKES	
Front	Dual drum brakes
Rear	Single drum brakes

DIMENSIONS / CAPACITIES	
Estimated Dry Weight *	310 lb (140 kg)
L x W x H	60.6 x 42 x 38.6 in. (154 x 108 x 98 cm)
Wheelbase	41 in. (105 cm)
Ground Clearance	8.3 in. (21.1 cm) under frame / 4.5 in. (11.4 cm) under rear axle
Seat Height	28 in. (71 cm)
Rack Capacity	N/A
Storage Capacity	N/A
Towing Capacity	N/A
Fuel Capacity	1.6 gal (6 L)

FEATURES	
Gauge	Neutral, reverse, fuel level & check engine lights
Instrumentation	N/A
Ingnition	Mechanical key
Lighting	Halogen running headlights
Winch	N/A
Seat	Standard
Handlebar	Sport handguards Ergonomy & controls sized for 10 years old and up
Protection	Front bumper

WARRANTY	
Factory warranty	2-year BRP limited warranty

MY24 RENEGADE X xc 1000 T ABS

Catalyst Gray & Neo Yellow

HIGHLIGHTS

- Tri-Mode Dynamic Power Steering (DPS)
- Anti-Lock Braking System (ABS)
- FOX† 1.5 PODIUM† RC2 shocks
- 12 in. (30.5 cm) cast-aluminum beadlock wheels
- Front & central skid plates
- Aluminum taper-profile handlebar with full wrap handguards
- X-package coloration, graphics and seat cover

ENGINE	
Type	60 kW (80 hp), Rotax® 976 cc V-twin, liquid cooled
Fuel Delivery System	Intelligent Throttle Control (iTC™) with Electronic Fuel Injection (EFI)
Transmission	CVT L / H / N / R / P
Drive Train	Selectable 2WD / 4WD with Brake Traction Control (BTC)
Driving Assistance	Work / Standard / Sport modes Intelligent Engine Braking (iEB™)
Power Steering	Tri-Mode Dynamic Power Steering (DPS)
Speed Category	More than 60 km/h

SUSPENSIONS	
Front Suspension	Arched double A-arm with front sway bar 9.2 in. (23.3 cm) travel
Front Shocks	FOX† 1.5 PODIUM† RC2
Rear Suspension	Torsional Trailing arm Independent (TTI) 9.9 in. (25.1 cm) travel
Rear Shocks	FOX† 1.5 PODIUM† RC2

TIRES / WHEELS	
Front & Rear Tires	ITP Holeshot† ATR 25 x 8/11 x 12 in. (63.5 x 20.3 / 27.9 x 30.5 cm)
Wheels	12 in. (30.5 cm) cast-aluminum beadlock

BRAKES	
Front	Dual 214 mm disc brakes with hydraulic twin-piston calipers
Rear	Single 214 mm disc brake with hydraulic twin-piston caliper

DIMENSIONS / CAPACITIES	
Estimated Dry Weight *	812.6 lb (368.6 kg)
L x W x H	88 x 48 x 58.2 in. (218.4 x 121.9 x 147.8 cm)
Wheelbase	51 in. (129.5 cm)
Ground Clearance	10.5 in. (26.7 cm)
Seat Height	34.5 in. (87.7 cm)
Rack Capacity	Rear: 35 lb (16 kg)
Storage Capacity	N/A
Towing Capacity	1,455 lb (660 kg) trailer with brakes and 740 lb (335 kg) trailer without brakes
Fuel Capacity	5.4 gal (20.5 L)

FEATURES	
Gauge	4.5 in. digital display
Instrumentation	DC Outlet, 15-A connector
Ingnition	RF Digitally Encoded Security System (D.E.S.S.™)
Lighting	LED headlights
Winch	N/A
T-Category features	Towing hitch with trailer plug, directional indicators, position lamps, mirrors, horn
Seat	Standard
Handlebar	Aluminum taper-profile handlebar with full wrap handguards
Protection	Mudguards Front (plastic) & central (aluminum) skid plates

WARRANTY	
Factory warranty	2-year BRP limited warranty

G2, G2L, G2S ACCESSORIES

G2, G2L, G2S ACCESSORIES

LinQ: Easy On, Easy Off Cargo	25
Racks & Holders	30
Cargo & Storage	31
Can-Am Windshields	33
Handlebars & Mirrors	34
Seats	35
Plastic Skid plates	36
HMWPE Skid Plates	37
Aluminum Skid Plates	38
HMWPE & Aluminum Skid Plates	40
Bumpers & Guards	41
Lights & Electrical	44
Winches	48
Hitches	50
Performance	51
Covers, Decals & Add-Ons	54
Apache Track Systems	56
ProMount Plows	59

BUNDLE UP TO NEVER COMPROMISE. YOUR ATV BUNDLES.

STEP 1: CHOOSE YOUR ESSENTIAL BUNDLE

		G2L G2L MAX	G2 G2 MAX
STARTER	LinQ Base	715002350	N/A
	LinQ 23 Gal (86 L) Trunk Box	715004923	715004923
	Handlebar Wind Deflectors	715001706	715001706
ADVANCED	LinQ Heavy-Duty Basket	715001215	715001215
	LinQ Tool Kit	715006829	715006829
	Handlebar Mirrors	715005366	715005366
PEAK	Bluetooth Handlebar Soundbar by MTX	219400840	219400840

STEP 2: PICK YOUR ADD-ON BUNDLE

		G2L G2L MAX	G2 G2 MAX
ADVENTURE	Self-Clearing Footwells	715004759	715004759
	Electronic Device Holder	715004919	715004919
	Storage 2.6 Gal (10 L) Bag	269502121	269502121
	Fender Flares	715004487	N/A
	Mud Flaps	N/A	715007089
HUNT	LinQ Gear Grips	715005340	715005340
	Gun Boot Rack	715001918	715002113
	Gun Boot 6.0 Impact by Kolpin	715001419	715001419
	Expedition Front Bumper	715007233	715007233
WORK	Large Cargo Box	715007001	715007001
	LinQ Tool Holder	715007358	715007358
	USB Power Outlet Kit	219400510	219400510
	Rachet Tie-Downs	715008309	715008309
WINTER	Seat Heater	715007211	715007211
	Heavy-Duty Seat Cover	715007212	715007212
	High Windshield Kit	715006382	715006382

LINQ: EASY ON, EASY OFF CARGO

LINQ ACCESSORIES

Compatibility/requirements

• No tools needed: Quickly install and remove accessories by hand. • Equip your Can-Am for specialized tasks in no time. • Sturdy mounting system that holds up to the roughest terrain.	OUTLANDER 450/570	OUTLANDER	RENEGADE
LinQ Accessories with 16" Base	• LinQ anchors mounted 16 inches apart, center-to-center. • Lower loading capacity than the LinQ with 36" base accessories. • Can be used on Can-Am ATV and SSV vehicles, Can-Am Spyder and Ryker vehicles, Sea-Doo watercraft and Ski-Doo snowmobiles.		
LinQ 4.2 Gal (16 L) Cooler 219400964 • Black / 295100698 • White	LinQ Adapter Plate **715007273** & LinQ Base Installation Kit **715008125**	LinQ Anchor Adapter Kit **715004960** & LinQ Base Installation Kit **715008125**	LinQ Luggage Rack **715001734** & LinQ Anchor Adapter Kit **715004960** OR LinQ Adapter Plate **715007274** & LinQ Base Installation Kit **715008125**
LinQ Tool Box 715008111			
LinQ SR 5.5 Gal (21 L) Bag 860202449			
LinQ 4.5 Gal (17 L) Sport Bag 860202447			
LinQ Modular Box 715005494 • (10 L) 715007112 • (20 L) 715006830 • (30 L)			
LinQ Tool Kit 715006829			
LinQ Roll-Top Bag 715008110			
LinQ Accessories with 36" Base	• Mount on LinQ racks often used by Can-Am ORV vehicles. • Higher loading capacity than the LinQ with 16" base accessories. • Usage is limited to Can-Am ORV vehicles.		
LinQ 12 Gal (45 L) Cargo Box 715003879	LinQ Base **715002350**	No further requirements	LinQ Luggage Rack **715001734**
LinQ 23 Gal (86 L) Trunk Box 715008749			
LinQ 32 Gal (121 L) Trunk Box 715001747 / 715001748 (1-up) 715001749 / 715001750 (MAX	No compatibility		
LinQ 11.5 Gal (43 L) Audio Cargo Box 715003018	LinQ Base **715002350**		
LinQ 8 Gal (30 L) Cooler Box 715004778 • Black / 715004698 • Gray	No compatibility		
LinQ Premium Storage Bag by OGIO 715002923 • Black	LinQ Base **715002350**		
LinQ Heavy Duty Basket 715001215			
LinQ Low Profile Basket 715004282			
LinQ Holders			
LinQ 4" Rack 715001711 • Silver / 715001665 • Black	Not compatible **Alternative 5" or 8" Rack Extensions (**715001913** or **715001914**) are available for G2L*	No further requirements	LinQ Luggage Rack **715001734**
LinQ 6" (15 cm) Rack Extension 715001712 • Silver / 715001671 • Black			
LinQ Mounted Gear Grips 715005340	LinQ Base **715002350**		
LinQ Tool Holder 715007358			
LinQ Gun Boot Rack 715002112 715002113	Not compatible **Alternative Gun Boot Racks (**715001918** or **715001919**) are available for G2L*		No compatibility

LinQ Accessories with 16" base

LinQ Modular Box

G2, G2L, G2S

715005494 · (10 L)
715007112 · (20 L)
715006830 · (30 L)

- Allows stacking of other modular boxes to always have the right gear accessible.
- Always have the right box size to fit everything.
- Can be installed on any LinQ base with a 16" width.
- See table for installation location and requirements.

Thermal Insert For LinQ Modular Box (10 L)

G2, G2L, G2S

219401110

- Insulated liner.
- Fits very well in the LinQ Modular Box (10 L).
- Can contain five 473 ml cans or six 355 ml cans.

LinQ Tool Kit

G2, G2L, G2S

715006829

- Includes:
  - Cutter pliers
  - Long-nose pliers
  - Locking plier
  - Ratchet wrench ⅜" drive
  - 6" ratchet extension
  - Integrated CVT belt storage location (belt not included)
  - Long-socket 19 mm ⅜" drive - 6pts
  - Socket 18 mm ⅜" drive
  - Long-socket 17 mm ⅜" drive - 6pts
  - Socket 15 mm ⅜" drive
  - Socket 13 mm ⅜" drive
  - Socket 10 mm ⅜" drive
  - Socket 8 mm ⅜" drive
  - Combined wrench 19 mm
  - Combined wrench 18 mm
  - Combined wrench 15 mm
  - Combined wrench 13 mm
  - Combined wrench 10 mm
  - Combined wrench 8 mm
  - Socket Torx T40 ⅜" drive
  - Socket Torx T30 ⅜" drive
  - Socket Torx T20 ⅜" drive
  - Breaker bar ⅜" drive
- See table for installation location and requirements.

LinQ 4.2 Gal (16 L) Cooler

G2, G2L, G2S

■ **219400964** · Black
□ **295100698** · Gray

- All the benefits of LinQ—simple, fast and secure.
- Rotomolded construction for exceptional rigidity and durability.
- Premium-quality foam insulation for optimal ice retention.
- Uses LinQ mounting system (Patent US 8777531 and US 8875830).
- Easy one-second on/off tool-less system.
- See table for installation location and requirements.

LinQ Tool Box

G2, G2L, G2S

715008111

- High precision injected HDPE construction provides rigidity and durability.
- 5 gal (19 L) maximum capacity.
- Weather-resistant, sealed and lockable cover.
- Marinized for salt water purposes.
- See table for installation location and requirements.

LinQ Roll-Top Bag

G2, G2L, G2S

715008110

- Fully waterproof Roll-Top dry bag will securely store and confine your equipment.
- LinQ mounted using heavy-duty rigid plastic base.
- High capacity storage solution 10.6 gal (40 L).
- Bottom foam liner for additional equipment protection.
- Integrated handle for easy transportation on/off the vehicle.
- Marinized for salt water purposes.
- See table for installation location and requirements.

SR 5.5 Gal (21 L) LinQ Bag

G2, G2L, G2S

860202449

- Semi-rigid expandable bag.
- 5.5 gal (21 L) capacity.
- See table for installation location and requirements.

LinQ 4.5 Gal (17 L) Sport Bag

G2, G2L, G2S

860202447

- 4.5 gal (17 L) capacity.
- Rigid bottom, semi-rigid top.
- See table for installation location and requirements.

LinQ Accessories with 36" base

LinQ 12 Gal (45 L) Cargo Box

G2 (front only for 6x6 & MAX models 2013-2014), G2L, G2S

715003879

- LinQ mounted for easy on, easy off installation.
- Holds cargo safely and securely while riding.
- See table for installation location and requirements.

LinQ 23 Gal (86 L) Trunk Box

G2 (except 6x6 models), G2L, G2S

715004923

- LinQ mounted for easy on, easy off installation.
- Lockable and weather-resistant.
- Holds cargo safely and securely while riding.
- Comfort pads for passenger.
- See table for installation location and requirements.

LinQ 32 Gal (121 L) Trunk Box

G2 (except MAX models & 6x6), G2S — **715001747**

European Version (EC compliant) — **715001748** · No rear tail light.

- LinQ Retrofit Adapter Plate (715001334) is required for G1 models.
- Trunk Box Panels available in many colors to match your vehicle (sold separately).
- See table for installation location and requirements.

LinQ 32 Gal (121 L) Trunk Box for Outlander Max

G2 (MAX models only except 6x6 models) — **715001749**

European Version (EC compliant) — **715001750** · No rear tail light.

- Passenger comfort is ensured on active rides as well as longer recreational rides thanks to the ergonomically designed passenger padding comfort-fitted with a portion made of closed cell foam that won't absorb water.
- Very easy to embark even when driver is seated.
- Trunk Box Panels available in many colors to match your vehicle (sold separately).

LinQ 32 Gal (121 L) Trunk Box Panels

G2 (except 6x6 models), G2S

- Color panels to match the LinQ 32 gal (121 L) Trunk Box to your vehicle.

715001391 · Black	**715002985** · Manta Green
715001392 · Yellow	**715002986** · Can-Am Red
715001395 · Viper Red	**715006119** · Orange Crush
715002481 · White	**715006120** · Squadron Green
715002480 · Light Gray	**715007074** · Tundra Green
715002984 · Octane Blue	

LinQ 32 Gal (121 L) Trunk Box Panels
(Not illustrated)

EUROPEAN VERSION (EC compliant)

- Color panels to match the LinQ 32 gal (121 L) Trunk Box to your vehicle.
- No rear tail light.

■ **715001397** · Black	■ **715006122** · Manta Green
■ **715001398** · Yellow	■ **715006121** · Can-Am Red
■ **715006124** · Viper Red	■ **715006123** · Orange Crush
☐ **715002483** · White	

LinQ 11.5 Gal (43 L) Audio Cargo Box

G2 (front only for 6x6 & MAX models 2013-2014), G2L, G2S

715003018

- Mounts on/off easily to hold/carry cargo safely and securely.
- The Bluetooth enabled receiver and 6.5" (16.5 cm) speakers are smartly concealed and integrated in the cover.
- Automatic shut-off function protects your battery by turning the system off after 10 minutes of inactivity.
- Backlit control panel perfect for night riding.
- Water-resistant speakers.
- Delivers the best sound quality on the market to sweeten your ride courtesy of a built-in full range high-efficiency amplifier.
- See table for installation location and requirements.

LinQ 8 Gal (30 L) Cooler Box

G2 (except 6x6 models), G2S

■ **715004778** · Black
■ **715004698** · Gray

- LinQ mounted for easy on, easy off installation.
- Rotomolded construction provides exceptional rigidity and durability.
- Premium-quality foam insulation for optimal ice retention.
- Integrated, fully-removable compartment protects food.
- Robust rubber latches keep the cover tightly closed.
- Weather-resistant.
- Convenient drain plug.
- See table for installation location and requirements.

LinQ Premium Storage Bag by OGIO

G2 (except 6x6 models), G2L, G2S

■ **715002923** · Black

- LinQ mounted for easy on, easy off installation.
- Holds cargo safely and securely while riding.
- See table for installation location and requirements.

LinQ Low Profile Basket

G2, G2L (front only for MAX & 6x6 models), G2S

715004282

- Low profile, open basket increases cargo space.
- Perfect for easy access to tools, rope, winch and plow accessories.
- Multiple bungee cord and tie-down anchor points.
- Made of impact-resistant injected polypropylene.
- See table for installation location and requirements.

LinQ Heavy-Duty Basket

G2, G2L (front only for MAX & 6x6 models), G2S

715001215

- Made of high-strength, low-alloy steel.
- LinQ mount for easy on, easy off installation.
- Can be placed on both front and back racks of vehicle.
- See table for installation location and requirements.

Large Cargo Box

G2 , G2L (except 6x6)

715007001

- Rear bed to carry large items.
- Anchor points (D-ring), LinQ fixtures for tool holder, and marks to allow the installation of a 16" accessory.
- Also has a mat for the floor and slot to enable the installation of a divider and a slot for a divider to close the recess on the rear vertical lip.
- It is installed on ATV platforms through the LinQ system and hooks to make it easily installable and removable.

Installation of some accessories shown may impact vehicle compliance with some regulations. Consult your local dealer for information.

LinQ Holders

LinQ Tool Holder

G2, G2S, G2L | **715007358**

- Ultra-versatile tool holder.
- Convenient swivel-latch allows tools to be stored in any orientation.
- Sold in pairs.

LinQ Gear Grips

G2, G2S, G2L | **715005340**

- Durable and flexible grips provide a custom fit for a variety of items from 1" to 4" (2.5 cm to 10 cm) in diameter.
- Heavy-duty design for carrying bows, fishing poles, rakes, farm tools and more.
- Quick-release button opens grip quickly for easy access to gear.
- Heavy-duty base system built for the toughest adventures.
- Make transporting your tools a snap by combining the Gear Grips with the LinQ System.
- 360° orientation.
- Sold in pairs.

LinQ Mounting

LinQ Anchor Adapter Kit

G2, G2S | **715004960**

- Allows the installation of accessories with LinQ base of 16" on LinQ racks.
- Tool-less installation and removal.
- For G2S, the LinQ Luggage Rack (715001734) is required for installation.

LinQ Base

G2L | **715002350**

- Made of polypropylene glass fiber.
- Allows you to install LinQ accessories.
- Sold in pack of 4.

LinQ Lock

G2, G2S, G2L, | **860201968**

- Simple way to securely lock most LinQ accessories.
- Lock cover protects lock from the elements.
- Corrosion resistant.
- Pack of 1, includes 2 keys.
- Not compatible with LinQ 4.2 US gal (16 L) Cooler, LinQ Tool Box, LinQ Tool Holder and LinQ Gear Grips.

LinQ Replacement Parts

715001707

- Unique mounting fastener usable on any LinQ System accessory.
- Tool-less installation and removal.
- Sold in pairs.

RACKS & HOLDERS

LinQ Rack Extension – 4" (10 cm)

G2, G2S

715001711 · Silver
715001665 · Black

- Fits front or rear.
- Strong and durable.
- Helps keep cargo securely in place.
- Easy and tool-less installation thanks to the LinQ System.
- Anti-corrosion coating with durable powder coat finish.
- LinQ Luggage Rack (715001734) is required for G2S.

LinQ Rack Extension – 6" (15 cm)

G2, G2S

715001712 · Silver
715001671 · Black

- Fits front or rear.
- Strong and durable.
- Helps keep cargo securely in place.
- Easy and tool-less installation thanks to the LinQ System.
- Anti-corrosion coating with durable powder coat finish.
- LinQ Luggage Rack (715001734) is required for G2S.

Rack Extension – 5" (13 cm)

G2L

715001913

- Fits front or rear.
- Made of carbon steel.
- Provides tie-down points to secure cargo on racks.
- Easy installation on tubular rack.
- Anti-corrosion coating with durable powder coat finish.

Rack Extension – 8" (20 cm)

G2L

715001914

- Fits front or rear.
- Made of carbon steel.
- Provides tie-down points to secure cargo on racks.
- Easy installation on tubular rack.
- Anti-corrosion coating with durable powder coat finish.

LinQ Luggage Rack

G2S (except X mr models)

715001734

- Bolt-on rack.
- Enables use of LinQ mounted accessories on the G2S.

LinQ Base Plate

G2L

715007273

- Enables use of 16" wide LinQ base accessories on G2L to extend cargo options and journey opportunities.
- Requires LinQ base kit (715008125).

LinQ Base Plate

G2S

715007274

- Enables use of 16" wide LinQ base accessories on G2S to extend cargo options and journey opportunities.
- Requires LinQ Base Kit (715008125).

Gun Boot Rack

G2L (except MAX models)	**715001918**
G2L (MAX models only)	**715001919**

- Made of steel.
- Designed for the tubular rack.
- For use with Gun Boot 6.0 Impact by Kolpin.
- Can be mounted to either side of the vehicle.

Gun Boot 6.0 Impact† By Kolpin†

G2, G2L — **715001419**

- Extra room for pistol-grip-type weapons and small bipods.
- Easily fits firearms up to 51" (130 cm) in total length.
- Provides ample room for 2 ⅜" (60 mm) scopes.
- Hatchback design allows easy access.
- Ergonomically designed handle and molded attachment points for sling.
- Snap-close cover with locking capability.
- Designed to accommodate left and right hand bolt-action rifles and shotguns.
- Includes removable, shock absorbing foam and nylon Impact liner for superior interior protection.
- Requires appropriate mounting kit for installation.

LinQ Gun Boot Rack
(Not illustrated)

G2 (except MAX, 6x6 & X mr 1000)	**715002112**
G2 (MAX & X mr 1000 models only)	**715002113**

- This lightweight Gun Boot Rack can be mounted on either side of your Outlander using the tool-less LinQ System.
- For use with Gun Boot 6.0 Impact by Kolpin.

Multi-Fit Holder

G2, G2L

715002354 · Single
715001945 · Double

- Open U-shaped bracket for carrying tools (shovel, axe) and hunting weapons (rifle, bow) that are safely secured, but easily accessible.
- Easy installation on tubular rack, extension racks, basket or bumpers.
- For G2, the LinQ Rack Extension (715001711) is required.
- Sold in pairs.

LinQ Gear Grips

G2L — **715001421**

- Durable, flexible grips cushion and protect while providing a custom fit for a variety of items from 1" to 4" (2.5 cm to 10 cm) in diameter.
- Heavy-duty design for carrying bows, fishing poles, rakes, farm tools and more.
- Quick-release button opens grip quickly for easy access to gear.
- Heavy-duty base system built for the toughest adventures.
- Easy installation on tubular racks, extension racks, brackets or bumpers.
- Sold in pairs.

CARGO & STORAGE

Log Bars

G2 (6x6 models only) — **715001987**

- Log bars allow you to convert the cargo bed into a perfect transport space for 4' (120 cm) timber.
- The driver's safety is guaranteed by the protective front screen.

Hard Top

G2 (6x6 models only) — **715002394**

- The hard top provides a 116 gal (440 L) cargo box.
- Locking secures your belongings.
- The cover raises assisted by gas cylinders.

Side Walls & Tailgate

G2 (6x6 models only) — **715005153**

- Allows for a quick and easy conversion of the cargo bed into a trunk with plenty of room.
- Rotationally molded walls provide extreme durability for hard work - in all conditions.

Cargo Protection Wall
(Not illustrated)

G2 (6x6 models only) — **708301522**

- Fits with or without side walls

Cargo Box Pool

G2L (6x6 models only) | **715005256**

- Transforms the flatbed into a large capacity cargo box for increased loading possibilities.
- Made of durable formed HDPE and shaped to maximize cargo space.
- Allows access to vehicle´s water-resistant rear compartment.
- Designed for perfect fit and easy installation.

Tailgate Extension/Divider

G2 (6x6 models only) | **715002017**

- The sturdy tailgate extension provides a 10" (25 cm) extension to the cargo space.
- Thanks to the longer cargo bed, even large loads pose no problem.
- With the help of LinQ quick locks, the extension also acts as a solid space divider for the cargo bed.

Tarpaulin

G2 (6x6 models only) | **715002416**

- Fitted to cover all of the items in your cargo box thoroughly.
- Prevents splash from entering cargo box.
- Easily removable for quick access.

18 Gal (70 L) Utility Box

G2 (6x6 models only) | **715001999**

- Wherever you go and whatever you do, this handy 18 gal (70 L) utility box is your mobile storage.
- The lid keeps your equipment safe from the elements in all conditions.
- Slides under the flatbed with handles for easy access.

Cargo Box Net

G2 (6x6 models only) | **715001371**

- Solid net designed to hook to the bottom of the cargo box for secure and compact confinement of your cargo.

Soft Storage Bag

G2, G2L, G2S | **715003759**

- 3 -section bag.
- Transport gear in a weatherproof bag.
- 11.8 gal (45 L) capacity soft cargo bag designed with vehicle's rack in mind to maximize potential storage.
- LinQ Luggage Rack (715001734) is required for G2S.

Storage 2.6 Gal (10 L) Bag

269502121

- Roll-Top dry bag for fully protecting your cargo from the elements.
- Fits in rear compartment of your vehicle.

CAN-AM WINDSHIELDS

Deluxe Fairing

G2 (except X mr & 6x6), G2L

■ **715001232** · Black
■ **715000935** · Yellow 2000
■ **715002479** · Light Gray
■ **715006125** · Squadron Green
■ **715007073** · Tundra Green

- Innovative, richly featured wind protection.
- Quick tool-less removal once base brackets are mounted on handlebar.
- Two cup holders.
- Ready for GPS mounting kit.
- Optional mirrors and auxiliary lighting.
- Requires low, high or extra high windshield.
- Tapered Handlebar Adapter Kit is required for vehicles with 1⅛" (28 mm) tapered aluminum handlebars.
- Does not fit T3 models.

Tapered Handlebar Adapter Kit
(Not illustrated)

Deluxe Fairing | **715002470**

- Required to install Deluxe Fairing on an Outlander X-TP and on any vehicle equipped with 1 ⅛" (28 mm) tapered aluminum handlebars.

Extra High Windshield

Deluxe Fairing | **715000936**

- 16" (41 cm) windshield provides the ultimate protection against the elements while touring.
- For wind protection and winter applications.
- Tool-less installation and replacement.

Installation of some accessories shown may impact vehicle compliance with some regulations. Consult your local dealer for information.

High Windshield

Deluxe Fairing | **715001211**

- 11" (28 cm) high, for wind protection and winter applications.
- Tool-less installation and replacement.

Installation of some accessories shown may impact vehicle compliance with some regulations. Consult your local dealer for information.

Low Windshield

Deluxe Fairing | **715001227**

- 6" (15 cm) windshield allows you to keep your vehicle looking sporty while giving you some protection from the elements and the possibility of enjoying directional lighting.
- Tool-less installation and replacement.

Installation of some accessories shown may impact vehicle compliance with some regulations. Consult your local dealer for information.

Accessories

Auxiliary Windshield Lighting

Deluxe Fairing | **715003115**

- 2 premium LED spots for Deluxe Fairing for both increased output and directional lighting.
- 1 ,800 lumens.
- 2 x 10W LED Cree light kit.
- Long-range illumination up to 350' (107 m), drawing less than 1 amp per light.

Deluxe Mirror Kit

Deluxe Fairing | **715002353**

- Improved mounting system.
- Wide rear view.
- Perfect fit with your Deluxe Fairing.

Windshield Kits

Extra High Windshield Kit

G2, G2L, G2S (except X mr models) | **715003023**

- Made of polycarbonate with integrated vent to reduce air turbulence and rumble noise at high speeds for a quieter and smoother ride.
- Quick tool-less removal once base brackets are mounted on handlebar.
- Fits straight and tapered handlebars.
- Improved design for enhanced rigidity.
- Steering Cover (709400939) is required for XT and Mossy Oak models.
- 16" (41 cm) windshield.
- For ultimate wind protection and winter applications.
-

Installation of some accessories shown may impact vehicle compliance with some regulations. Consult your local dealer for information.

High Windshield Kit

G2, G2L, G2S (except X mr models) | **715006382**

- Made of polycarbonate with integrated vent to reduce air turbulence and rumble noise at high speeds for a quieter and smoother ride.
- Quick tool-less removal once base brackets are mounted on handlebar.
- Fits straight and tapered handlebars.
- Improved design for enhanced rigidity.
- Steering Cover (709400939) is required for XT and Mossy Oak models.
- 11" (28 cm) windshield.
- For wind protection and winter applications.

Installation of some accessories shown may impact vehicle compliance with some regulations. Consult your local dealer for information.

Low Windshield Kit

G2, G2L, G2S (except X mr models) | **715003021**

- Made of polycarbonate with integrated vent to reduce air turbulence and rumble noise at high speeds for a quieter and smoother ride.
- Quick tool-less removal once base brackets are mounted on handlebar.
- Fits straight and tapered handlebars.
- Improved design for enhanced rigidity.
- Steering Cover (709400939) is required for XT and Mossy Oak models.
- 6" (15 cm) windshield.
- Allows you to keep your vehicle looking sporty while giving you some protection from the elements.

Installation of some accessories shown may impact vehicle compliance with some regulations. Consult your local dealer for information.

HANDLEBARS & MIRRORS

Handlebar Wind Deflectors

G2, G2L, G2S

- Rugged injected plastic construction with Can-Am logo.
- Include removable cap for air flow adjustment.
- Mounting kit sold separately.

- **715000525** · Black / Yellow
- **715000537** · White / Black
- **715001706** · Black / Black
- **715003811** · Can-Am Red / Black
- **715003812** · Manta Green/Black
- **715003813** · Orange / Black
- **715003814** · Octane Blue / Black
- **715006117** · Squadron Green / Black
- **715006118** · Viper Red / Black

Passenger Wind Deflectors

G2 and G2L (MAX models only) | **715001669**

- These wind deflectors fit on the passenger handles and provide greater comfort while riding.
- Easy to install and remove.

Full Wrap Aluminum Mounting Kit

G2, G2L, G2S | **715001378**

- Lightweight black die cast aluminum construction.
- Includes complete hardware.
- Handlebar wind deflectors sold separately.

Aluminum Tapered Handlebar

G2, G2L, G2S | **715000550**

- ⅞" - 1 ⅛" (22 mm - 28 mm) tapered handlebar made of 6061-T6 aluminum.
- Includes all hardware, center steering foam and cover.

Xt Handlebar Protector Kit	G2, G2L	**703100352**

- Not compatible with Mud Strap (715003053).

Mirrors Left – ⅜" (10 mm)	G2, G2L, G2S	**708200963**

- True vision surface 5" x 3" (13 cm x 8 cm).
- Matte finish.
- Stem includes ⅜" (10 mm) thread.
- Bracket (715000190) is required for installation on DS 450.
- Bracket not required for installation on Outlander and Renegade.

Mirrors Right – ⅜" (10 mm) *(Not illustrated)*	G2, G2L, G2S	**709400523**

- True vision surface 5" x 3" (13 cm x 8 cm).
- Matte finish.
- Stem includes ⅜" (10 mm) thread.
- Bracket (715000190) required except for vehicles with right hand brake.

Handlebar Mirrors	G2, G2L, G2S	**715005366**

- Adjustable handlebar mounted convex mirrors.
- The convex surface allows improved visibility with a wider field of view.
- Doesn't require a windshield or fairing to be mounted.

SEATS

Driver Backrest	G2L (except MAX models)	**715003941**
	G2 (except 6x6 & MAX models)	**715003940**
	G2 (6x6 models only, except MAX)	**715003611**

- Provides the rider's back with that extra support that makes riding that extra mile way more comfortable.
- Adjusts horizontally to match the driver's height and preference.
- Mounts and locks in firmly onto the vehicle.

Outlander Max Passenger Seat Kit	G2 2015 & up, G2L (MAX models only)	**715002373**

- Perfect to replace used or damaged passenger seat.

Heavy-Duty Seat Cover	G2, G2L	**715007212**

- Heavy-duty materials to cover and protect the seat.
- Abrasion- and tear-resistant.
- Simply installs by stretching around the original seat; the elastic holds the cover securely in place.

PLASTIC SKID PLATES

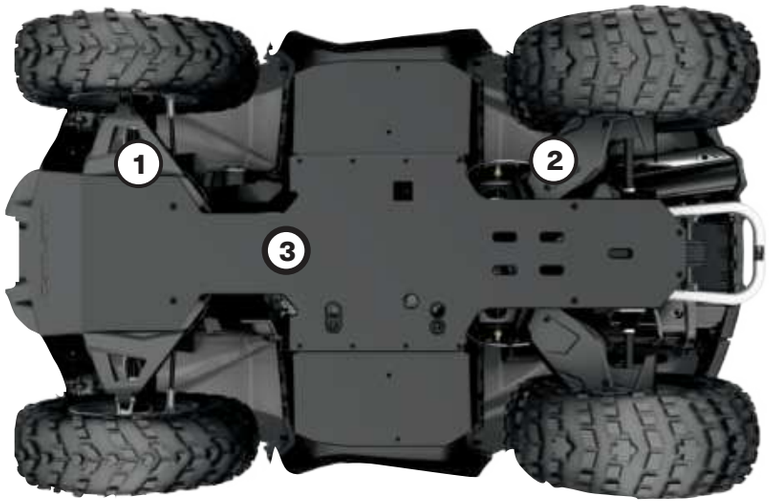

715003046

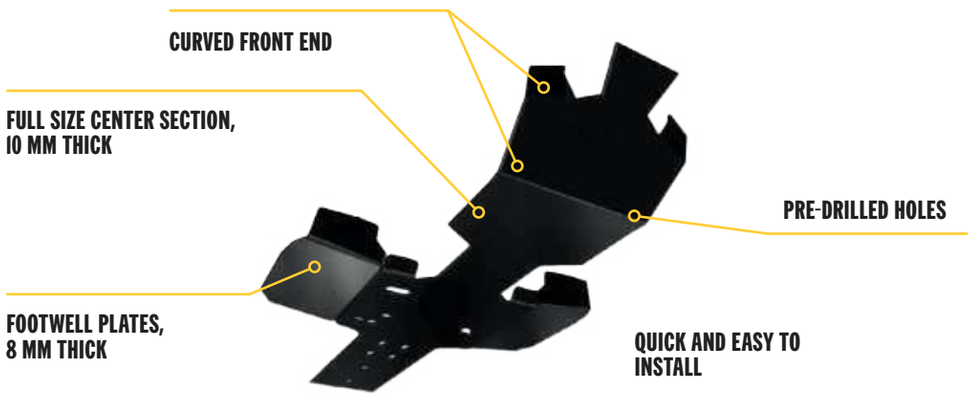

Our Plastic Plates glide smoothly and silently over obstacles, offering great protection in rough terrain. Made of abrasion-resistant thermoformed High Molecular Weight Polyethylene (HMWPE).

- Lighter than aluminum.

Offer your Outlander & Renegade the full protection kit or get them individually	OUTLANDER	OUTLANDER MAX	OUTLANDER 6X6	G2, G2S	G2L	G2L MAX
INDIVIDUAL PLASTIC SKID PLATES						
1 A-ARM PROTECTORS G2	715002924	715002924	715002924	715002924	—	—
2 TRAILING ARM PROTECTORS G2	715002925	—	715002925	715002925	—	—
3 PLASTIC SKID PLATE G2	715006019	715006020	715005290 715005320 (MAX)	—	715006115	715006116

HMWPE SKID PLATES

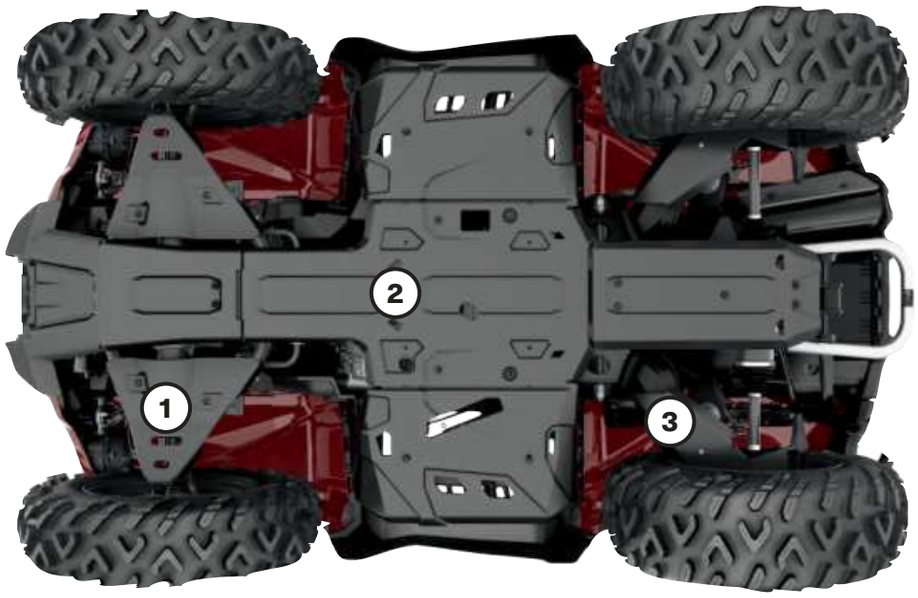

Our plastic plates glide smoothly and silently over obstacles, offering great protection in rough terrain. Made of ¼" (6 mm) thick abrasion-resistant thermoformed High Molecular Weight Polyethylene (HMWPE).

- Lighter than aluminum.
- Superior stress crack resistance.
- High impact strength.

OUTLANDER, RENEGADE

	G2						G2L		G2S	
	2016 & Prior		2017-2018		2019 & Up				2017-2018 Models	2019 - 2022
	Except MAX & X mr 1000R models	MAX & X mr 1000R models only	Except Max & X mr 1000R models	MAX & X mr 1000R models only	Except MAX & X mr 1000R models	MAX & X mr 1000R models only	Except MAX models	MAX models only		
HMWPE Skid Plate Protection Kit										
	715004214	**715004215**	**715004209**	**715004210**	**715004806**	**715004807**	**715004211**	**715004212**	**715004213**	**715004809**
Individual HMWPE Skid Plates										
① **A-Arm Protectors**	**715002924**	**715002924**	**715002924**	**715002924**	**715004822**	**715004822**	**715002924**	**715002924**	**715002924**	**715004822**
② **Underbelly Plates** *Footwell portion not compatible with Renegade X mr*	**715002926**	**715002927**	**715002926**	**715002927**	**715002926**	**715002927**	**715002928**	**715002929**	**715002974**	**715002974**
③ **Trailing Arm Protectors**	–	–	**715003466**	**715003466**	**715004823**	**715004823**	**715003466** (2015 to 2020 models only)	**715003466** (2015 to 2020 models only)	**715003466**	**715004823**

ALUMINUM SKID PLATES

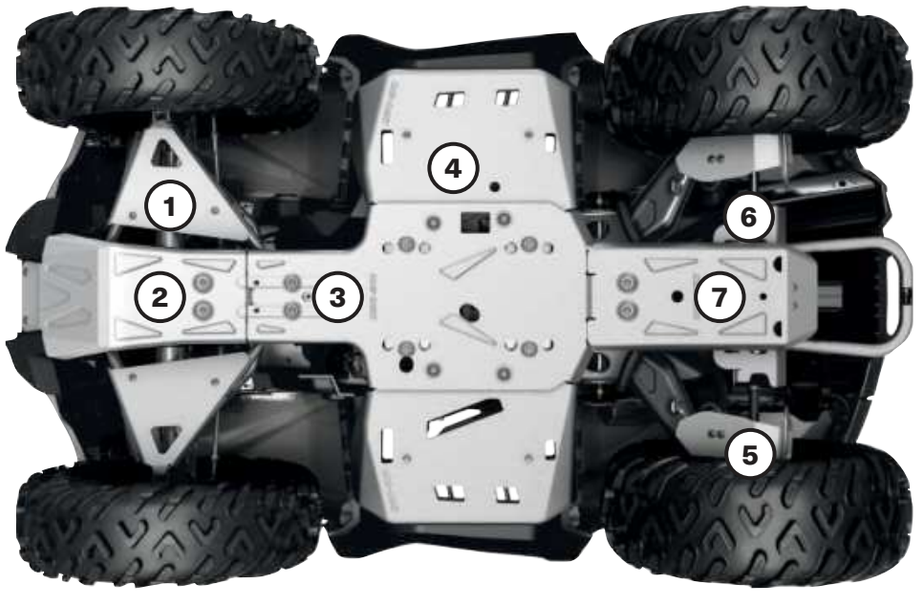

For ultimate durability and strength, all our Aluminum Skid Plates are made with 3⁄16" (4.5 mm) thick High Strength 5052 H32 Aluminum.

- Ultimate durability.
- High strength.

OUTLANDER

	G2						G2L	
	2016 & prior		2017-2018		2019 & up		Any year	
	Except MAX & X mr 1000R models	MAX & X mr 1000R models only	Except MAX & X mr 1000R models	MAX & X mr 1000R models only	Except MAX & X mr 1000R models	MAX & X mr 1000R models only	Except MAX models	MAX models only
Aluminum Skid Plate Protection Kit								
	715002137	715002138	715004197	715004198	715004804	715004805	715004199	715004200
Individual Aluminum Skid Plates								
① A-Arm Protectors	715001667	715001667	715001667	715001667	715004820	715004820	715001667	715001667
② Front Skid Plate	715000926	715000926	715000926	715000926	715000926	715000926	715001906	715001906
③ Central Skid Plate	715002078	715002078	715002078	715002078	715002078	715002078	715002078	715002078
④ Footwell Protector Plates	715000922	715000922	715000922	715000922	715000922	715000922	715000922	715000922
⑤ Trailing Arm Protectors	—	—	715008595	715008595	715004821	715004821	715008595	715008595
⑥ Rear Differential Protectors	715000920	715000920	715000920	715000920	715000920	715000920	715000920	715000920
⑦ Rear Skid Plate	715002028	715002029	715002028	715002029	715002028	715002029	715002028	715002029

ALUMINUM SKID PLATES

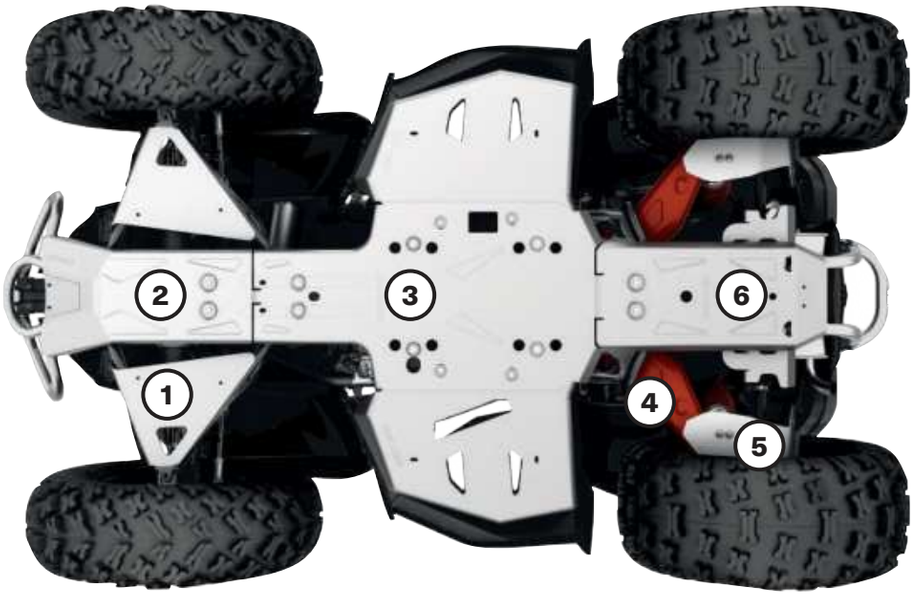

For ultimate durability and strength, all our Aluminum Skid Plates are made with 3⁄16" (4.5 mm) thick High Strength 5052 H32 Aluminum.

- Ultimate durability.
- High strength.

	RENEGADE			
	G2S			
	2016 & prior	2017-2018	2019 - 2022	2023 & up
Aluminum Skid Plate Protection Kit				
Not compatible on X mr models	715002139	715004201	715004808	715009730
Individual Aluminum Skid Plates				
1 A-Arm Protectors	715001667	715001667	715004820	715004820
2 Front Skid Plate	715000925	715000925	715000925	715001906
3 Central Skid Plate	715002078	715002078	715002078	715002078
4 Trailing Arm Protectors	715001129	715008595	715004821	715004821
5 Rear Differential Protectors	715000920	715000920	715000920	715000920
6 Rear Skid Plate	715002028	715002028	715002028	715002028

HMWPE & ALUMINUM SKID PLATES

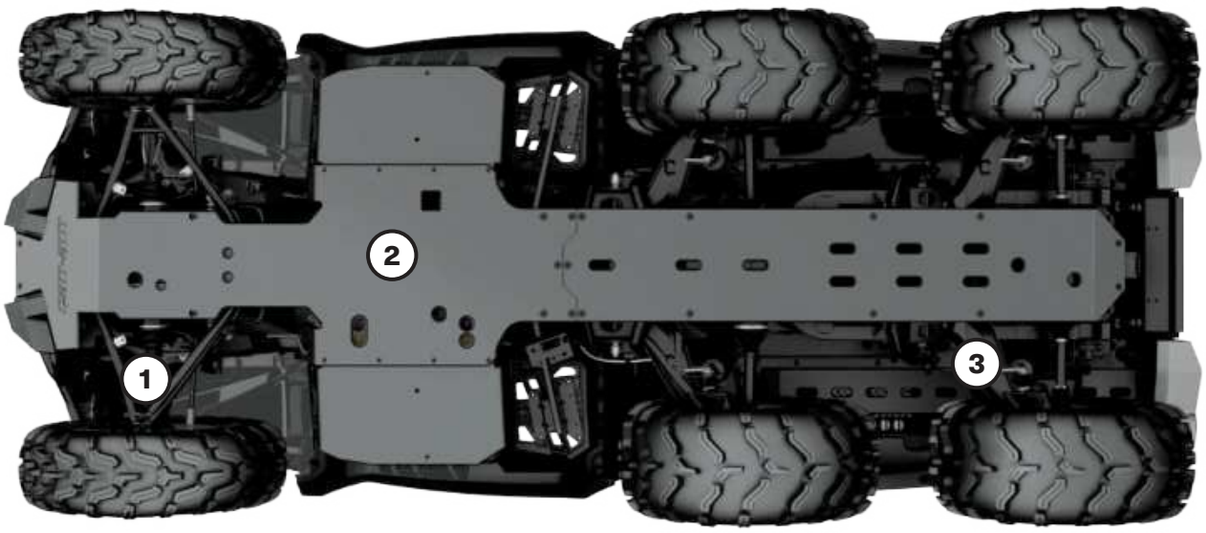

Our Plastic and Aluminum Plates glide smoothly and silently over obstacles, offering great protection in rough terrain.

HMWPE
Made of 1/4" (6 mm) thick abrasion resistant thermoformed High Molecular Weight Polyethylene (HMWPE).

- Lighter than aluminum.
- Superior stress crack resistance.
- High impact strength.

ALUMINUM
Made with High Strength 3/16" (4.5 mm) thick 5052 H32 Aluminum.

- Ultimate durability.
- High strength.

OUTLANDER 6X6

	G2 6x6			G2L 6x6
	2016 & prior	2017 - 2018	2019 & up	Any year
Individual HMWPE Skid Plates				
① HMWPE A-Arm Protectors	715002924	715002924	715004822	715002924
② HDPE Full Underbelly Skid Plate	715005290 (except Max)	715005290	715005290 (except Max)	715004987 (except MAX)
	715005320 (Max Only)	715005320	715005320 (Max Only)	715005259 (Max Only)
③ HMWPE Trailing Arm Protectors	–	715003466	715004823	715003466 (2020 models & prior only)
Individual Aluminum Skid Plates				
① Aluminum A-Arm Protectors	715001667	715001667	715004820	715001667
② Aluminum Full Underbelly Skid Plate				
③ Aluminum Trailing Arm Protectors		715008595	715004821	715008595

BUMPERS & GUARDS

Bumpers

Expedition Front Bumper

G2, G2L (except X mr models & X xc models 2022 & up) | **715007233**

- Made of 1.5″ profiled steel tubes for complete protection of the vehicle's front.
- Protects and doesn't obstruct the vehicle's headlights.
- Integrated mounting spots for lights.
- Inside and outside anticorrosion coating with a durable powder coat finish.

Expedition Rear Bumper

G2, G2L | **715007234**

- Made of 1.5″ profiled steel tubes for complete protection of the vehicle's rear.
- Protects and doesn't obstruct the vehicle's taillights.
- Inside and outside anticorrosion coating with a durable powder coat finish.
- G2 base and DPS rear bumper installation requires 705008164 and 705008165.

NEW X mr Front Bumper

G2S 2023 & up | **715008198**

- Enhanced vehicle front protection. Required as a mounting point for Radiator Relocator (715008898).

XT Front Bumper

G2 | **715004837**

- Provide additional protection against obstacles.
- Tough and durable, can be added on base Outlander model to convert vehicle into XT model.
- Standard on XT, XT-P, Mossy Oak and Limited models.
- Large tube construction with textured black finish and metal corners.

XT Rear Bumper

G2 | **715004920**

- Provide additional protection against obstacles.
- Tough and durable, can be added on base Outlander model to convert vehicle into XT model.
- Standard on XT, XT-P, Mossy Oak and Limited models.
- Large tube construction with textured black finish and metal corners.

XT Front Bumper

G2L | **715001910**

- Winch compatible.
- Large tube construction.
- Protects vehicle against obstacles.
- Standard on XT models.

XT Rear Bumper

G2L | **715001911**

- Large tube construction.
- Protects vehicle against obstacles.
- Standard on XT models.

Extreme Front Bumper

G2	**715001286***
G2L	**715004279**

- Ultra-sturdy build.
- Enhances front-vehicle protection.
- Compatible with XT Front Bumper.
- Fits the Apache™ 360 Track System (when side panels are removed).
- Not compliant with T-category models.
- **Not compatible with Front Hitch.*

Rancher Front Bumper

G2, G2L (except X mr models) — **715003461**

- The low front end protection and plates allow you to use your ATV within cattle herds and guard the safety of both the vehicle and the animals.
- The flat front portion facilitates gently prodding cattle or pushing light objects, e.g. closing a fence.
- The full frontage coverage extends to provide an extra layer of defense to your headlights and radiator.
- Inside and outside anti-corrosion coating with durable powder coat finish.
- Not compatible with track systems, plows and front hitch.
- Not compliant with T-category models

Rancher Rear Bumper

G2, G2L (except 6x6 models) — **715003462**

- Ideal for using your ATV within cattle herds and guarding the safety of both the vehicle and the animals.
- Coverage extends to provide an extra layer of defense to your tail lights.
- Inside and outside anti-corrosion coating with durable powder coat finish.
- Not compatible with track systems.
- Not compliant with T-category models.

Renegade Extreme Front Bumper

G2S 2022 and prior (except X mr models) — **715002469**

- Enhanced vehicle front protection.
- Required as a mounting point for Radiator Relocator (715008898).

Guards

Body Side Protector

G2 2012 to 2018 with stock XT Bumper, G2 2012 & up with Rancher Bumper, G2L with Rancher Bumper, (except X mr and 6X6 models)	**715003459**
G2 2019 & up with XT Bumpers, (except X mr and 6X6 models)	**715004940***
G2L with XT Bumpers, (except X mr and 6X6 models)	**715003614**

- The heavy-duty fender guard designed to pull double duty, protecting your ATV and also enhancing the look of your ATV.
- Made tough and designed to deliver a rugged appearance, this fender guard offers full side protection for farmer, rancher and forestry applications.
- Built of durably bold 1.25" (3 cm) diameter steel-tube construction, with inside and outside anti-corrosion coating with durable powder coat finish.
- Not compatible with Self Clearing Footwell.
- XT Front and Rear Bumpers or Rancher Front and Rear Bumpers are required for installation.
- Requires Body Side Protector Extensions (715003460) for installation on MAX models.

**Not compatible with Front and Rear Rancher Bumpers.*

Body Side Protector Extensions
(Not illustrated)

G2, G2L (MAX models only) — **715003460**

- This specially designed extension for the Body Side Protector is made specifically to fit and seamlessly integrate into the look of Outlander MAX models.

Mud Flaps

G2 (with stock fender flares)	**715007089**

- Keeps mud, snow and debris out of cargo area and protects trailer and vehicles behind you.
- Adds aesthetic appearance to your vehicle.
- Requires stock fender flare.
- Sold in pairs.

Fender Flares

G2 2012-2018 (except with 30" tires) (except 6x6 models)	**715001764***
G2 2019 & up (with 30" tires) (except 6x6 models)	**715004250****
G2L	**715001909*****
G2L European vehicles only 2015 & up	**715004487**

- Kit designed to deliver extra protection from dirt and debris, therefore a must if you enjoy riding in the mud.
- Made of injected plastic that hugs your vehicle fenders perfectly.
- Gives vehicle added flair for that rugged cool look.
- Includes front and rear extensions and all mounting hardware.

**Comes stock on G2 models 2019 & up (except X mr models).*
***Standard on G2 X mr 1000R.*
****Not compatible with European vehicles.*

Fender Flare Extensions

G2 (except 6x6 models)	**715005111***
G2L	**715003615****

- Block terrain debris from kicking up onto you as you ride or damaging your vehicle thanks to these extra-large Fender Flare Extensions, which also include mud flaps for added protection from mud/snow, especially when riding with track kits.
- Made of High Molecular Weight Polyethylene (HMWPE) for advanced abrasion resistance.
- Include front and rear extensions.

**Must be used with Fender Flare for G2 (715001764).*
***Must be used with Fender Flare for G2L (715001909).*

Fender Flares

G2S (except X mr models)	**705012695**

- Integrated extended Fender Flares for sporty look and full body protection from dirt and water.
- Include front and rear extensions and all mounting hardware.

Flatbed Protection Tubes

G2 (6x6 models only)	**715002030**

- Bolt-on bumpers for the sides of the 6x6 flatbed.
- Protect the exterior plastic components of the flatbed from rocks, trees and other obstacles when traversing enclosed areas or loading cargo onto the bed.

Flatbed Protection Tubes

G2L (6x6 models only)	**715005266**

- Bolt-on bumpers for the sides of the 6x6 flatbed.
- Protect the exterior plastic components of the flatbed from rocks, trees and other obstacles when traversing enclosed areas or loading cargo onto the bed.

LIGHTS & ELECTRICAL

Integrated Heated Grips & Thumb Throttle Combo

G2, G2L, G2S (2024 & up) | **715005072**

- Heat levels for grips and thumb displayed on vehicle screen.
- Ergonomic button integrated on LH grip.
- Single button for both grips and thumb heat selection.
- Five temperature settings for the thumb and grips.
- Adjustable heat ratio between grip and thumb warmer.
- Hold button to reach maximum heat quickly.
- Remembers your last heat setting.
- IP67-rated waterproof sealing keeps the elements out.
- ECE compliant.
- Plug-and-play installation.
- Clamp-on grips, no glue required.

Heated Grips & Thumb Throttle Combo

G2, G2L, G2S (except 2020 & up models equipped with 850 engine and 2019 & up models with 1000R engine, T Category models)	**715003250** Not compatible with Intelligent Throttle Control (iTC)
G2, G2L, G2S (2020 & up models equipped with 850 engine and 2019 & up models with 1000R engine, T Category models)	**715008739*** Compatible with Intelligent Throttle Control (iTC)

- LED dimmer facilitates reading temperature settings.
- 4 temperature settings with individual controls for thumb and grips.
- Returns to previous heat setting.
- One-touch shutdown.
- Wiring Cable is required for installation on G2L models only.

**Relocation bracket (715007619) required for installation on T-category models & G2L XU (INTL model)*

Wiring Cable
(Not illustrated)

G2L | **710004567**

- Required for installation of Heated Hand Grips & Throttle Combo.

Heated Visor Outlet

G2, G2L | **715001246**

- Strategically positioned on vehicle to maintain your agility.
- Optional visor outlet that delivers fog-free riding.
- Quick and easy installation.
- Sold individually.
- Heated Visor not included.

Heated Passenger Grips & Visor Outlet

G2, G2L (MAX models only) | **715008794**

- Replace your stock passenger handles.
- Dual temperature switch integrated into seat arm for 3-zone heated handles and grips.
- Heated visor outlet integrated into seat arm.

USB Power Outlet Kit

G2, G2L, G2S | **219400510**

- Recharges your electronic devices while riding* (smartphone, MP3, heating gear, etc.).
- Dual port USB connectors.
- The power outlet is not capable of recharging all device types while riding.

Seat Heater

G2, G2L | **715007211**

- 25 W seat heater delivers chill-free riding comfort.
- One temperature only.
- Heated pad and electrical harness only.
- Heavy Duty Seat Cover (715007212) is required for the installation.

Engine heater

Outlander 500 / 570 / 650 / 800 (G1/G2)	**605154278**
Outlander 1000 (G2)	**715002043**

Electronic Device Holder

G2, G2L (except 6x6 & X mr models) | **715004919**

- Robust injected-polypropylene construction allows for the right fit and easy installation.
- Adjustable unit safely holds smartphones or small tablets with a length or width mesuring between 2.9" (7.5 cm) and 5.1" (13.0 cm) with or without protective case.
- Integrated storage (0.6 gal / 2.1 L).
- Guiding wire grooves to pass charging cable through the lid.
- Possibility of relocating 12V power outlet or installing USB outlet in storage compartment (USB power outlet sold separately).
- Not compatible with windshields or Snorkel Kit.

3.5" (9 cm) LED Lights (2 X 14W) LED Driving Lights

G2, G2L (except X mr models) | **715003666**

- 14W LED lights producing 1,260 lumens each.
- Equipped with 6 high power LEDs in a heavy-duty die cast aluminum housing.
- Features 2 attachment points — if one attachment point fails due to a collision, rotate to the next channel point and re-mount the light.
- Sold in pairs.
- CE certified.
- Spot lens for a narrow and long light beam spread, ideal when driving at higher speeds.
- Expedition Front Bumper (715007233) and Light Power Cable (715007275) required for installation.

3.5" (9 cm) LED Lights (2 X 14W) LED Flood Lights

G2, G2L (except X mr models) | **715003665**

- 14W LED lights producing 1,260 lumens each.
- Equipped with 6 high power LEDs in a heavy-duty die cast aluminum housing.
- Features 2 attachment points — if one attachment point fails due to a collision, rotate to the next channel point and re-mount the light.
- Sold in pairs.
- CE certified.
- Flood lens for a wide light beam spread, ideal for working applications like plowing or for cornering, dusty or foggy riding conditions.
- Expedition Front Bumper (715007233) and Light Power Cable (715007275) required for installation.

4" (10 cm) Round LED Lights (2 x 25 W)

G2, G2L (except X mr models) | **715002935**

- 25 W LED spotlights.
- 1,800 lumens.
- Rugged and waterproof.
- Includes basic wiring and switch.
- Can-Am branded grill.
- Sold in pairs.
- Not EC compliant.
- Expedition Front Bumper (715007233) and Light Power Cable (715007275) required for installation.

10" (25 cm) Double Stacked LED Light Bar (60 Watts)

G2, G2L (except X mr models) | **715002933**

- Equipped with 12 5W Cree LEDs.
- 5,400 lumens.
- Rugged and waterproof.
- Packs a big punch for its size.
- Not EC compliant.
- Expedition Front Bumper (715007233) and Light Power Cable (715007275) required for installation.

Light Power Cable

(Not illustrated)

G2, G2L | **715007275**

- Required for installation of the 10'' (25 cm) LED Light Bar, the 3.5'' (9 cm) and 4'' (10 cm) LED Lights.

Bluetooth Handlebar Soundbar by Mtx

G2, G2L, G2S | **219400840**

- Bluetooth speaker with the unbeatable convenience of fingertip control.
- Rugged IP66-rated weather-resistant speaker designed for outdoor use.
- Driven by 150 watts of quality audio power.
- Seamless integration and operation from Bluetooth enabled devices.
- Includes input, ground and ignition wires, plus auxiliary port and 3.5" (8.89 cm) connector cable.
- Not compatible with XT Handlebar Protector Kit.
- EC compliant.

Note: We recommend you use 320 Kbps MP3 - 192-256 Kbps AAC or AIFF, WAV formats to match the potential of the speaker. More compressed formats will probably have degraded sound quality.

Multi Position Light Mount Kit

G2, G2L, G2S | **715004274**

- Multi-position plastic clamps that fit on various tubing sizes: 0.75" to 1.5" (19 mm to 38 mm).
- Required for the installation of the 2" (5 cm) Square LED Lights (2 x 10W).
- Kit includes tube clamp mounts and power cables.

Baja Designs High Beam Kit

G2 (2022 and prior) | **715004284**

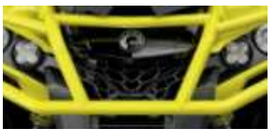

- Thanks to their direct bolt-on and plug-and-play installation right into the original high beam location, upgrading from your stock high beam lights to these powerful Baja Designs Squadron Pro LED Lights becomes child's play.
- Each spot is equipped with 4 Cree LEDs producing 4,900 lumens at 40 watts.
- Driving/Combo light pattern for smooth blend of light for both near field applications and distance.
- Not EC compliant.

2" (5 cm) Square LED Lights (2 X 10 Watts)

G2, G2L, G2S | **715004293**

- 2 x 900 lumens 10W LED Cree light kit.
- Long-range illumination up to 350' (107 m), drawing less than 1 amp per light.
- Multi-Position Light Mount Kit is required for installation.
- Not EC compliant.

RAM† LED Spotlight

G2, G2L, G2S | **710005423**

- 540 lumens LED light (9W) heavy-duty spotlight standard-equipped with 1" (2.5 cm) diameter rubber-coated double ball and socket system.
- Not EC compliant.

Battery Charger/Maintainer

715005061

- Keeps stored lead-acid batteries charged.
- Charges and maintains small batteries.
- Microprocessor controlled multi-stage charging for added precision, safety and battery life.
- Automatically detects 6- or 12-volt batteries.
- Reverse hook-up protection helps protect battery and charger from damage.
- Auto-voltage detection.
- Press the display button to show the charge progress.
- Content: 3 amp battery charger, clamp adapter, DC adapter, 24" (61 cm) fused ring leads harness with weather cap, owner's manual.
- Not EC compliant.
- US plug (110V).
- Not available in Europe.

Jump Starter

715005062

- IPX3 water-resistant and enclosed output ports.
- 4 LED battery indicators for easy read on battery charge level.
- Compact design, will conveniently fit in your backpack, glove box or any other storage compartment.
- 2.4A + 1A/5V USB ports for fast charging of all USB devices.
- Smart cable provides protection against reverse polarity, short circuit, low voltage, high temperature and reverse charging.
- Built-in LED light (3 modes).
- Content: 300CA jump starter, SA858 smart cable clamp, MC-USB to USB charging cable, travel bag, user manual.
- Not EC compliant.
- Not available in Europe.

Quick Connect Battery Cable

715005408

- Quickly and easily connect and charge different items with your charger.
- Included in the Battery Charger/Maintainer (715005061).
- Sold individually.
- Not available in Europe.

C-TEK charger

860200997

- ·CTEK, the manufacturer of the smartest battery chargers in the world, has produced a BRP specific charger for all BRP products.
- ·Charger is built to meet the demanding arctic conditions.
- ·Ask your dealer for more information.

Quick Connect Cable with Battery Indicator

715006055

- Quickly and easily connect and charge different batteries with your charger.
- 3-color LED indicator provides constant battery health indication.
- Sold individually.
- Not available in Europe.

GPS RAM† Mount for Handlebar

G2, G2L, G2S

715001985
While supplies last

- Convenient bracket for installing the Garmin Montana GPS (not included) onto your unit's handlebar.

Digitally Encoded Security System (D.E.S.S.) Green Key

G2, G2S (2018 & up)

710005232

- Anti-theft technology, Digitally Encoded Security System (D.E.S.S) key snaps easily on the vehicle and provides riders easy and quick starts every time.
- The key communicates with the vehicle wirelessly so the vehicle starts only when the key code matches the vehicle, for ultimate peace of mind.
- The Programmable D.E.S.S. Key can also be programmed to 3 modes:
  - Work mode: Limits vehicle speed to 40 kph (25 mph) but does not limit engine torque.
  - Normal mode: Limits vehicle speed to 70 kph (44 mph) and 50% torque reduction.
  - Performance mode: No restrictions.

WINCHES

Can-Am HD Winches

Can-Am HD 2500 Winch

G2, G2L (Except T-category models 2022 & up)	**715006414**
G2, G2L (T-category models 2022 & up)	**715008140**

- Heavy-duty four-way roller fairlead.
- Ergonomic clutch handle.
- Rugged all-steel gears and bushings provide more torque and longer life.
- Automatic 100% load-holding brake.
- Sealed solenoid for all-weather protection.
- Wired Remote Control sold separately.
- Plug-and-play wiring and attachment brackets.
- Weather-sealed handlebar-mounted switch.
- Pulling strength capability of 2,500 lb (1,134 kg).
- 50 ft. of 3⁄16" (15.2 m of 4.8 mm) wire steel cable.
- EC-compliant.

Can-Am HD 3500 Winch

G2, G2L (Except T-category models 2022 & up)	**715006415**
G2, G2L (T-category models 2022 & up)	**715008137**

- Heavy-duty four-way roller fairlead.
- Ergonomic clutch handle.
- Rugged all-steel gears and bushings provide more torque and longer life.
- Automatic 100% load-holding brake.
- Sealed solenoid for all-weather protection.
- Wired Remote Control sold separately.
- Plug-and-play wiring and attachment brackets.
- Weather-sealed handlebar-mounted switch.
- Pulling strength capability of 3,500 lb (1,588 kg).
- 50 ft. of 3⁄16" (15.2 m of 4.8 mm) wire steel cable.
- EC-compliant.

WARN† VRX Winches

WARN VRX 35-S Winch

G2, G2L, G2S (Except T-category models 2022 & up)	**715006109**
G2, G2L, G2S (T-category models 2022 & up)	**715008139**

- Extreme IP68-rated waterproof sealing keeps the elements out.
- Durable all-metal construction.
- Black powder-coated finish and stainless-steel fasteners for corrosion resistance.
- Robust new clutch design based on 70+ years of WARN 4WD hub lock know-how.
- Handlebar-mounted rocker control.
- Load-holding brake for great control.
- Smooth and reliable all-metal three-stage planetary gear train.
- Limited lifetime warranty (mechanical), 3-year warranty (electrical).
- Pulling strength capability of 3,500 lb (1,361 kg).
- 50 ft. of 3⁄16" (15 m of 4.8 mm) synthetic rope.
- Cast aluminum fairlead.
- Wire harness (715002453) required for installation.
- Winch mounting plate is required for G2S (STD & X xc 2022 & prior only).
- EC-compliant.

Rear winch kit

G2 (except 6x6 models)	**715007100**
G2 (6x6 models only)	**715006503**
G2L (6x6 models only)	**715007099**

- The remote-controlled rear winch is a godsend when youwant to pull yourself out of a tough spot or move heavy loads.
- Includes a fully-sealed Warn winch and all wiring and hardware needed for an easy and quick installation.
- Pulling strength capability of 3,000 lb (1,361 kg).
- 50 ft. of 7⁄32" (15.2 m of 5.5 mm) wire steel cable.

Winches Accessories

Wireless Remote Control

WARN Winches	**715002542**

- The system is quick and easy to install, thanks to a wiring harness with an integrated antenna and all necessary mounting hardware.
- The system allows you to operate your winch from anywhere within a 50' (15.2 m) radius, increasing your recovery options.
- All components are weatherproof.

Wired Remote Control

WARN Winches	**715006378**
Can-Am HD Winches (715006414 & 715006415)	**715006555**
Can-Am HD Winches (715008140 & 715008141)	**715008121**

- This kit allows winch owners to add the hand-held remote to their winch.
- This kit allows winch owners to add the handheld remote to vehicles with a stock winch.
- Works in conjunction with the mini-rocker switch.
- Wired Remote & Remote Socket included.
- EC-compliant.

Winch Accessories Kit

715002409

- Get the most out of your winch.
- Double your pulling power, change your pulling direction and keep your winch in proper working order.
- Includes tree straps, snatch block, shackle and winching gloves.

WARN Hawse Fairlead

WARN Winches	**715007698**

- Double powder-coated construction.
- Required to use the Synthetic Winch.
- Cable (715004254) on WARN winches.
- To be used with synthetic winch cables only.

Roller Fairlead

WARN Winches	**715007699**
Can-Am HD Winch	**710007459**

- Features top, bottom and side rollers for less cable wear and smoother operation from any direction for easier winching.

Hook with Safety Latch & Strap Kit

Can-Am HD Winches	**705014949**

- Heavy-duty winch-rope hook with stainless steel snap.
- Includes a nylon safety strap.

Replacement Wire Rope – Can-Am HD

705014983
705014984

- Play it safe, always carry a replacement wire rope.
- 2,500 lb (1,134 kg) pulling strength with 50 ft of 3⁄16" (15.2 m of 4.8 mm) wire rope for 705014983.
- 3,500 lb (1,588 kg) pulling strength with 50 ft of 7⁄32" (15.2 m of 5.5 mm) wire rope for 705014984.

Replacement Wire Rope – ATV WARN Winches

715006256

- Play it safe, always carry a replacement wire rope.
- 3,500 lb (1,588 kg) pulling strength.
- 50 ft. of 7⁄32" (15.2 m of 5.5 mm) aircraft grade steel wire.

Synthetic Winch Cable

ATV WARN Winches

715004254

- Easier to manipulate than steel cable.
- Replaces the original cable on any factory installed WARN winch or sold as an accessory by BRP.
- Kit includes synthetic rope and rock guard sleeve.
- Always use with the new Hawse Fairlead (715007698).
- 50 ft. (15.2 m) of 3⁄16" (15.2 m of 4.8 mm) synthetic rope.
- 3,500 lb (1,588 kg) pulling strength.

Winch Mounting Plate

G2S (2022 & prior)

715000927

- Adds functionality to your Renegade.
- Fits Can-Am winches by WARN.

Winch Wire Harness
(Not illustrated)

G2 2021 & up, G2S 2021 & up and G2L

715002453

- Required plug-and-go wiring to install WARN winch only.
- Not required for Can-Am HD winches.

HITCHES

Hitches

Rear Hitch

G2, G2L (except 6x6 models), G2S

715001925

- E-coat finish.
- Fixed hitch ball mounting bracket.
- Provides fixed mounting point for trailer ball to provide vehicle with towing capabilities.
- This hitch offers 1,300 lb (590 kg) of towing capacity.
- Hitch ball not included.

Front and Rear Hitch Drawbar

G2, G2L, G2S

715008350

- Standard on 2" (5 cm) receiver hitch.
- It offers 1,650 lb (750 kg) of towing capacity.
- Hitch ball not included.
- Forged steel.

Front coupling device

T3

705205025

- Required for T3 models.

Multitrailer

619590024

- Bogie wheels updated to be more silent than before and now equipped with grease nipples.
- Product developed for heavy-duty use.
- 100% galvanized steel.
- Specifications: 12 mm polywood base, strong stand, movable attachment points (4 pc),
- tipping bed, removable sides and 4 pc timber holder.
- Underside of the bogie and frame designed to travel over stones and logs (no sharp edges).
- Bed length: 182 cm
- Bed width: 66 cm bottom / 95 cm top
- Bed height: 60 cm
- Weight: 200 kg with timber holders and sides

Hitches Accessories

Rear Receiver Hitch

G2S 2012 with 800R or 1000 engines G2S 2013 & up, G2L & G2	**715005186**

- E-coat finish.
- Does not affect ground clearance.
- Trailer ball not included.
- On 4X4 use, this hitch offers 1,500 lb (680 kg) of towing capacity.
- On 6x6 use, this hitch offers 1,654 lb (750 kg) of towing capacity.
- Compliant with European T regulations.
- Not compatible with G2L models with Rear Skid Plates.

Front Receiver Hitch

G2	**715000921**

- Front receiver hitch for Outlander with or without a winch.
- This hitch offers 1,300 lb (590 kg) of towing capacity.
- Allows you to maneuver your trailer easily in tight, confined areas.
- Hitch bar sold separately.
- Not compatible with Extreme Front Bumper, Rancher Bumper and ProMount Plows.

Rubber Receiver Plug

705204503

- Rubber cap for 2" (5 cm) hitch receiver.

PERFORMANCE

Performance

Renegade Snorkel Kit

G2S (2020 & prior)	**715006000**
G2S (2021 & up)	**715007083**

- Comprehensive kit.
- Extended air intakes and CVT exhaust.
- CVT outlet integrates into pod cover.
- Ideal for muddy conditions.
- Not compliant with T-category

Renegade Radiator Relocator Kit

G2S 2023 & up	**715008898**
G2S 2022 & prior	**715001929**

- Relocates radiator to top mount position.
- Prevents cooling performance loss in muddy conditions.
- Uses existing radiator.
- Includes support, hardware and hoses.
- Engineered for easy cooling system bleeding and maintenance.
- Radiator not included.
- Renegade Extreme Front Bumper (715002469) required for G2S 2022 and prior or X mr Front Bumper (715008198) required for 2023 and up for installation (except X mr).
- Not compliant with T-category

Mud Strap

G2, G2L, G2S	**715003053**

- Convenient sturdy grab-handle.
- Lets drivers redistribute their weight for improved traction in demanding conditions.
- Not compatible with XT Handlebar Protector Kit (703100352).

Radiator Protector

G2, G2S (except G2S with 500 engine) | **715001744**

- Metal shield that mounts over radiator face, providing protection from stones and branches.

Outlander Snorkel Kit

G2 2015 & up, G2L (except X mr & 6x6 models) | **715005999**

- Comprehensive kit.
- Extended air intakes and CVT exhaust.
- CVT outlet integrates into pod cover.
- Must be installed on a vehicle without XT Handlebar Protector Kit.
- Ideal for muddy conditions.
- Not compatible with windshields.
- Not compliant with T-category

Outlander Snorkel Kit

G2 (X mr models only), G2L (X mr models only) | **715002518**

- Comprehensive kit.
- Extended air intakes and CVT exhaust.
- CVT outlet integrates into pod cover.
- Must be installed on a vehicle without XT Handlebar Protector Kit.
- Ideal for muddy conditions.
- Not compatible with windshields.
- Raised horn only.
- Provides higher intake.
- For best fit and finish, appropriate gauge support is required.
- Not compliant with T-category

Outlander Radiator Relocator Kit

G2, G2L (except 6x6 models) | **715001930**

- Relocates radiator to top mount position.
- Prevents cooling performance loss in muddy conditions.
- Uses existing radiator.
- Includes support, hardware and hoses.
- Engineered for easy cooling system bleeding and maintenance.
- Radiator not included.
- Not compliant with T-category.

X mr Traction Plates

G2 (MAX models only), G2L | **715001752**

- Provide extra foot grip for driver when riding in extreme mud conditions.
- Help driver maintain ideal riding position to maximize vehicle traction.
- Made of aluminum.
- Not meant for a passenger.

Self-Clearing Footwells

G2 2015 & up, G2L | **715004759**

- Made from aluminum.
- Replace original footwells.
- Feature large evacuation ports to avoid mud and snow accumulation in footwells.
- Aggressive design for improved traction.
- Not compatible with Body Side Protectors.
- Sold in pairs.

Footpeg Kit

G2, G2L | **715001131**

- Provides maximum integrated grip and more stability during vigorous riding.
- Kick-up end generates added grip during hard cornering.
- Made of aluminum.
- Sold in pairs.

Foam Air Filter by Twinair†

G2, G2S, G2L | **715001333**

- Maximizes performance by increasing air flow throughout RPM range.
- Maintenance-friendly, i.e., just wash, re-oil and re-use after riding in severely dusty/muddy environments.

Heavy-Duty Springs

G2 2012-2018 (Base model, DPS, XT, X mr with 650 engine only & Limited – except 6x6) G2S (Base model with 500 & 570 engines only)	**715003199** · Front
G2L (except Mossy Oak, PRO, 6x6 and X mr models)	**715007203** · Front
G2 2012-2018 (Base model, DPS, XT & X mr with 650 engine only – except 6x6) G2S (Base model with 500 & 570 engines only)	**715003200** · Rear
G2 2019 & up (Base, DPS & XT models, except 6x6)	**715005159** · Front & Rear

- Heavy-duty springs provide enhanced stiffness.
- Perfect for snow clearing and hauling heavy loads.
- Improves handling and helps prevent accidental overturns.
- Kit includes 4 springs.
- Standard on Outlander PRO and Mossy Oak models.

Front Shock Covers

G2, G2L, G2S | **715500301**

- F eature ventilation holes.
- Offer added protection in rough terrain and weather conditions.
- Sold in pairs.

Front and Rear Heavy-Duty Shock kits

G2L (4x4 and 6x6 models) | **715007841** • Front | **715008136** • Rear

- Stiffer shocks than the standard ones, for Heavy-duty usage.
- Improved load capacity, ground clearance and comfort (front and rear).
- Sold in pairs.

Extreme Heavy-Duty rear spring set

G2 | **715001998**

- E.g. for use with Forest Pro Log Trailer.

Yoshimura

Yoshimura Slip-On Exhaust – Outlander

G2 (except 6x6 models) | **715005480**

- Made from 304-grade stainless steel.
- Better sounding, better looking and lighter than stock muffler.
- USDF/USDA approved spark arrester.
- Non-EPA compliant (for racing application only).
- Not EC compliant.
- Fuel injection system tuning not required.
- Not compatible with CARB & T Category models 2018 & up, NRMM & 650 Engine 2022 & up.
- Not available in Europe.

Yoshimura Slip-On Exhaust – Renegade

G2S 2012 & up (except 570 engine and X mr models) | **715005481**

- Made from 304-grade stainless steel.
- Better sounding, better looking and lighter than stock muffler.
- USDF/USDA approved spark arrester.
- Non-EPA compliant (for racing application only).
- Not EC compliant.
- Fuel injection system tuning not required.
- Not compatible with CARB & T Category models 2018 & up, NRMM & 650 Engine 2022 & up.
- Not available in Europe.

Emergency Accessories

Emergency Kit

715006102

- Complete emergency kit provides all essential equipment and supplies to get out of most unfavorable situations powersport enthusiasts may find themselves in.
- Includes jumper cables, air compressor, tire-repair kit, first-aid kit, ratchet tie-down, duct tape, 3,300 lb (1,500 kg) tow strap, zip-ties and cloth rags.

COVERS, DECALS & ADD-ONS

Trailering Covers

G2 (except MAX models)	**715001737**
G2 (MAX and X mr 1000R models only)	**715001736**
G2L (except MAX models)	**715002026**
G2L (MAX models only)	**715002025**
G2S (except X mr models)	**715000683**

- Heavy-duty canvas made of UV-resistant solution-dyed polyester.
- Protect windshield and colored panels from abrasion.
- All high-abrasion areas are reinforced with a double canvas layer.
- Opening for fuel cap access.
- Weather-resistant trailering cover protects your vehicle during transportation.
- Quick and easy installation.
- Designed to perfectly fit your vehicle with or without Can-Am accessories.

Storage Covers

G2, G2L, G2 X mr (except 1000), G2L X mr, G2S, G2S X mr	**715001720**
G2, G2L (MAX and X mr 1000R models only)	**715001668**
G2 (6x6 models only)	**715002492** **715005095** (Europe)
G2, G2L (except MAX models)	**715001597** · Mossy Oak Break-Up Country Camo
G2 MAX (6x6 models only	**715004488**
G2L (6x6 models only)	**715005261**
G2L MAX (6x6 models only)	**715006024**

- Weather-resistant storage covers.
- For vehicle storage only.
- UV-resistant solution-dyed polyester construction.
- Quick and easy installation.
- Designed to perfectly fit your vehicle with or without Can-Am accessories.

Flag

715000277 · Yellow

- Make sure everyone knows what you're riding.
- Perfect for the dunes and new riders.
- 8-ft. (2.4 m) length.
- Includes flag mount (715000127).

Flag Mount
(Not illustrated)

715000127

Bolt-On† Retractable Ratcheting Tie-Downs

295101072

- Perfect for transporting your powersport vehicle or securing loads.
- Mounts easily: Bolts on any flat surface (e.g., truck bed or frame).
- 1" x 6' (2.5 cm x 1.8 m) tie-down strap with heavy-duty stitching that delivers a 500 lb (226 kg) working load strength and 1,500 lb (680 kg) break strength.
- Convenient retractable push button automatically slackens, spools and stores away strap, while the ratchet mechanism tightens the strap snugly to secure your vehicle or load into place.
- Rubber ratcheting handle provides firm grip, and the hook is vinyl coated to protect whatever surface it hooks into.
- Sold in pairs.

Ratchet Tie-Downs

715008309
• Black/Gray

- 400 lb (181 kg) safe working load.
- 1" x 10' (2.5 cm x 3 m) strap with Can-Am, Sea-Doo, and Ski-Doo logos.
- Deluxe ratchet with rubber handle.
- Coated S hooks.
- Pack of 2.

Heavy-Duty Ratchet Tie-Down

715008308

- 1,000 lb (454 kg) safe working load.
- 1.5" x 6' (38 mm x 1.8 m) strap with BRP brands.
- Deluxe ratchet with rubber handle.
- Black-coated clip hooks.
- 12" (300 mm) webbing included.
- Pack of two.

Shifter Lock

G2, G2L

715007337

- Secure the vehicle's shifter by locking it in position.
- Prevents the vehicle from going into neutral without the lock key.

Lockable Gas Tank Cap

G2, G2L, G2S

860200387
619590085 (Scandinavia)

- Protects your fuel.
- Meets EPA requirements.

License Plate Bracket

G2L	**715002498**
G2S	**715001401**

- Provides specific area to install license plate.
- Mounts to rear of vehicle.

APACHE TRACK SYSTEMS

Apache Track Systems

Apache Backcountry Track System

G2 (except 6x6 models), G2S, G2L

715005247

- Designed to deliver the best flotation level and deep-snow performance on the market.
- Contact patch is 23% bigger than the Apache 360 LT.
- Impressive added ground clearance of 7" (18 cm), keeps the vehicle out of deep snow.
- Aggressive track design with 2" (5 cm) lug height for maximum traction on snow.
- Apache Backcountry Mounting Kit and engine and air intake pre-filters are required.
- For winter use only.

Installation of some accessories shown may impact vehicle compliance with some regulations. Consult your local dealer for information.

Idler Wheel Kit

Apache Backcountry Track System (rear tracks only)

860201230 · 141 mm

- Reduces drag and rolling resistance.
- Includes 2 wheels, brackets and hardware.
- Add up to 2 kits per rear track.
- Can extend slider life in hardened snow conditions.

Sliders with Vespel† Inserts

Apache Backcountry Track System

503194815

- Use DuPont Vespel inserts for less friction.
- Longer life.
- Can be cut to desired length.
- 8 needed per vehicle.
- Sold individually.

Rail Ice Scratchers

Apache Backcountry Track System

860201728

- Provide additional lubrication in hard and icy conditions.
- Rail mounted, small, light.
- Design expands on coil concept to allow reversing without damage.
- Easily stored when not in use.

Apache 360 & 360 LT

Apache 360 Track System

G2 (except 6x6 models), G2L, G2S

715006323

- Multifunctional tracks perfect for any Can-Am ATV.
- Average ground clearance of 16" (41 cm).
- 1" (2.5 cm) lugs in the front and 1.25" (3.2 cm) in the back.
- Apache 360 & 360 LT Mounting Kit and engine and air intake pre-filters are required.

Installation of some accessories shown may impact vehicle compliance with some regulations. Consult your local dealer for information.

Apache 360 LT Track System

G2, G2L, G2S

715005103

- Multifunctional tracks designed to support heavy loads and to fit on most Can-Am Off-Road vehicles.
- Front wheel height adjustment provides enhanced attack angle and better performance over rough terrain when raised or increased contact patch for improved flotation when lowered.
- Average ground clearance increase of 4.5" (11.4 cm).
- 1" (2.5 cm) lugs in the front and 1.25" (3.2 cm) in the back.
- Reliable heavy-duty build.
- EC compliant.
- Contact patch is 7 to 9% bigger than the Apache 360's.
- Apache 360 and 360 LT Mounting Kit, Track DPS Module and Engine and air intake pre-filters are required.

Installation of some accessories shown may impact vehicle compliance with some regulations. Consult your local dealer for information.

Apache 360 LT 6x6

Apache 360 LT (6x6) Track System

G2, G2L (6x6 only)	**715005104**

- Multifunctional tracks designed to support heavy loads and to fit on most Can-Am Off-Road vehicles.
- Front wheel height adjustment provides enhanced attack angle and better performance over rough terrain when raised or increased contact patch for improved flotation when lowered.
- Average ground clearance increase of 4.5" (11.4 cm).
- 1" (2.5 cm) lugs in the front and 1.25" (3.2 cm) in the back.
- Apache 360 LT Mounting Kit, Track DPS Module and Engine & Pre-Filter Kit are required.
- Reliable heavy-duty build.
- EC compliant.
- Exclusively for the Outlander 6x6.
- Recommended for use on snow only.

Installation of some accessories shown may impact vehicle compliance with some regulations. Consult your local dealer for information.

Apache Accessories

Apache Backcountry Mounting Kit
(Not illustrated)

G2 2018 & prior, G2S 2018 & prior, G2L	**715004830**
G2 2019, G2S 2019	**715004796**

- Required for installation of the Apache Backcountry Track System.
- DPS module and pre-filter are required and sold separately.

Installation of some accessories shown may impact vehicle compliance with some regulations. Consult your local dealer for information.

Track DPS Module
(Not illustrated)

G2, G2L, G2S	**715007338**

- An innovative DPS module that ensures speedometer accuracy and optimized steering assist, which make for perfect track control and riding ease.
- Required to install the Apache and Backcountry Track Systems.

Installation of some accessories shown may impact vehicle compliance with some regulations. Consult your local dealer for information.

Apache 360 & 360 LT Mounting Kit
(Not illustrated)

G2 2018 & prior (except 6x6 models) G2S 2018 & prior, G2L	**715007207**
G2 2019 & up (except 6x6 models), G2S 2019 & up	**715007206**
G2 2018 & prior, G2L (6x6 models)	**715004991**
G2 (6x6 models 2019 & up)	**715005105**

- Required to install Apache 360 & 360 LT Track Systems.
- DPS module and pre-filter not included.

Installation of some accessories shown may impact vehicle compliance with some regulations. Consult your local dealer for information.

Apache Track System Accessories

Air Intake Pre-Filter

715003483

- Adds extra protection to your engine in harsh riding conditions.
- Filter blocks particles larger than 0.007" (0.19 mm).
- Easy, tool-less installation.
- Necessary to maintain vehicle warranty when tracks are installed.
- Required to install the Apache and Backcountry Track Systems.
- Standard on Outlander 650, 650 X mr, 850, 1000, 1000R engines and G2L PRO.
- Not compatible with Snorkel Kits.

Engine Air Intake Pre-Filter

G2, G2L, G2S	**715004729**

- Adds extra protection to your engine in harsh riding conditions.
- Filter blocks particles larger than 0.005" (0.13 mm).
- Necessary to maintain vehicle warranty when tracks are installed.

APACHE TRACK SYSTEMS FITTING GUIDE

Apache Backcountry

Model Year / Model		Track	Track Mount	Track DPS Module	Prefilter without Snorkel	Prefilter with Snorkel
2015 & Up	G2L	715005247	715004830	715007338	715004729 & 715003483 (standard on G2 models and G2L PRO model)	715004729
2018 & Prior	G2, G2S					
2019 & Up	G2, G2S		715004796			

Apache 360 and Apache 360 LT

Model Year / Model		Track	Track Mount	Track DPS Module	Prefilter without Snorkel	Prefilter with Snorkel
2015 & Up	G2L	715006323 (Apache 360) OR 715005103 (Apache 360 LT)	715007207	715007338	715004729 & 715003483 (standard on G2 models and G2L PRO model)	715004729
2018 & Prior	G2, G2S					
2019 & Up	G2, G2S		715007206			

Apache 360 LT 6x6

Model Year / Model		Track	Track Mount	Track DPS Module	Prefilter without Snorkel	Prefilter with Snorkel
2018 & Prior	G2 6x6	715005104	715004991	715007338	715004729 & 715003483 (standard on G2 models and G2L PRO model)	715004729
2019 & Up	G2L 6x6					
2019 & Up	G2 6x6		715005105			

PROMOUNT PLOWS

PROMOUNT PLOW KITS

Reference Chart

	54" Black Steel	54" Yellow Steel	60" Black Steel	60" Yellow Steel	66" Black Steel	66" Yellow Steel	60" Flex2	66" Flex2
Plow Kit	**715007753**	**715008178**	**715007754**	**715008179**	**715007755**	**715008180**	**715008181**	**715008182**
Blade	**715004472**	**715005316**	**715004202**	**715005317**	**715006337**	**715006338**	**715004203**	**715006265**
Push Frame	**715007752**	**715007752**	**715007752**	**715007752**	**715007752**	**715007752**	**715007752**	**715007752**
Mounting Plate	**715007751**	**715007751**	**715007751**	**715007751**	**715007751**	**715007751**	**715007751**	**715007751**

Steel Plows

Can-Am ProMount Steel Plow Kits
54" (137 cm) Blade

G2, G2L, G2S

■ **715007753** · Black
■ **715008178** · Yellow

- These kits include:
  - Can-Am ProMount Steel Blade
  - Push Frame with Quick-Attach System
  - Mounting Plate

Can-Am ProMount Steel Plow Kits
60" (152 cm) Blade

G2, G2L, G2S

■ **715007754** · Black
■ **715008179** · Yellow

- These kits include:
  - Can-Am ProMount Steel Blade
  - Push Frame with Quick-Attach System
  - Mounting Plate

Can-Am ProMount Steel Plow Kits
66" (168 cm) Blade

G2, G2L, G2S

■ **715007755** · Black
■ **715008180** · Yellow

- These kits include:
  - Can-Am ProMount Steel Blade
  - Push Frame with Quick-Attach System
  - Mounting Plate

Can-Am ProMount Steel Blades
54" (137 cm) Blade

Fits ProMount Push Frame

■ **715004472** · Black
■ **715005316** · Yellow

- Blades available individually to create your own kit.
- Compatible with Can-Am ProMount Blade accessories to further enhance plow versatility (some plow accessories are not compatible with 54" (137 cm) plows).
- Not compatible with ProMount Drift Cutters, Blade Extensions and Edge Markers.
- Clears 50" (127 cm) when plow is fully angled.
- Blade height of 14.75" (37 cm).

Can-Am ProMount Steel Blades 60" (152 cm) Blade

Fits ProMount Push Frame

■ **715004202** · Black
■ **715005317** · Yellow

- Blades available individually to create your own kit.
- Compatible with Can-Am ProMount Blade accessories to further enhance plow versatility.
- Clears 54" (137 cm) when plow is fully angled.
- Blade height of 17" (43 cm).

Can-Am ProMount Steel Blades 66" (168 cm) Blade

Fits ProMount Push Frame

■ **715006337** · Black
■ **715006338** · Yellow

- Blades available individually to create your own kit.
- Compatible with Can-Am ProMount Blade accessories to further enhance plow versatility.
- Clears 60" (152 cm) when plow is fully angled.
- Blade height of 17" (43 cm).

Can-Am ProMount Steel Blades 72" (183 cm) Blade

Fits ProMount Push Frame

■ **715004474** · Black
■ **715006021** · Yellow

- Blades available individually to create your own kit.
- Compatible with Can-Am ProMount Blade accessories to further enhance plow versatility.
- Clears 66" (168 cm) when plow is fully angled.
- Blade height of 17" (43 cm).

Can-Am ProMount Flex2 Plow Kit

Can-Am ProMount Flex2 – 60" (152 cm) Plow Kit

G2, G2L, G2S

715008181

- These kits include:
  - Can-Am ProMount Flex2 Blade
  - Push Frame with Quick-Attach System
  - Mounting Plate

NEW Can-Am ProMount Flex2 – 66" (168 cm) Plow Kit

G2, G2L, G2S

■ **715008182** · Black

- This kit includes:
  - Can-Am ProMount Flex2 blade
  - Push Frame with Quick-Attach System
  - Mounting plate

Angle Plows

Can-Am ProMount Angle Blades 60" (152 cm) Steel Oneway State Blade

G2, G2L, G2S | **715007261**

- Make the job easier with the right tools, clear long alleys and make the task easier by sending the snow further out of the way.
- Wing end of plow measures 25" (63 cm) high and tapers down to 17" (43 cm).
- One-way “winged” state plow designed to throw snow higher.
- Rubber flap (715007299) designed to keep snow away from the driver is offered as accessory (sold separately).
- Can-Am branded.

Can-Am ProMount Angle Blades 66" (168 cm) Steel Oneway State Blade

G2, G2L, G2S | **715007263**

- Make the job easier with the right tools, clear long alleys and make the task easier by sending the snow further out of the way.
- Wing end of plow measures 25" (63 cm) high and tapers down to 17" (43 cm).
- One-way “winged” state plow designed to throw snow higher.
- Rubber flap (715007299) designed to keep snow away from the driver is offered as accessory (sold separately).
- Can-Am branded.

Can-Am ProMount Angle Blades 72" (183 cm) Steel Oneway State Blade

G2, G2L, G2S | **715007264**

- Make the job easier with the right tools, clear long alleys and make the task easier by sending the snow further out of the way.
- Wing end of plow measures 25" (63 cm) high and tapers down to 17" (43 cm).
- One-way “winged” state plow designed to throw snow higher.
- Rubber flap (715007299) designed to keep snow away from the driver is offered as accessory (sold separately).
- Can-Am branded.

ProMount One-Way State Blade Rubber Flap

(Not illustrated)

715007299

- Allows for more efficient snow projections in various snow conditions.

Can-Am ProMount Flex2 Plows

Can-Am ProMount Flex2 Blades – 60" (152 cm) Blade

Fits ProMount Push Frame | **715004203**

- Plow blade made of UHMWPE, flexible and impact absorbing material prevents damaging your plow when accidental impacts occur.
- Replaceable wear blade.
- Large pin designed for easy blade rotation to eliminate snow buildup at pivot point.
- Blade design provides best snow roll-off at any angle.
- Compatible with Can-Am ProMount Blade accessories to further enhance plow versatility.
- Clears 54" (137 cm) when plow is fully angled.

NEW Can-Am ProMount Flex2 66" (168 cm) Blade

Fits ProMount Push Frame | **715006265**

- Plow blade made of UHMWPE, flexible and impact absorbing material prevents damaging your plow when accidental impact occurs.
- Replaceable wear blade.
- Large pin designed for easy blade rotation to eliminate snow buildup at pivot point.
- Blade design provides best snow roll-off at any angle.
- Clears 60" (152 cm) when plow is fully angled.
- Blade height of 17" (43 cm).
- Compatible with Can-Am ProMount Blade accessories to further enhance plow versatility."

Can-Am ProMount Flex2 Blades – 72" (183 cm) Blade

Fits ProMount Push Frame | **715004485**

- Plow blade made of UHMWPE, flexible and impact absorbing material prevents damaging your plow when accidental impacts occur.
- Replaceable wear blade.
- Large pin designed for easy blade rotation to eliminate snow buildup at pivot point.
- Blade design provides best snow roll-off at any angle.
- Compatible with Can-Am ProMount Blade accessories to further enhance plow versatility.
- Clears 66" (168 cm) when plow is fully angled.

Can-Am ProMount Plow Accessories

Can-Am ProMount Push Frame with Quick-Attach System

G2, G2L, G2S

715007752

- Heavy-duty steel tubes designed to withstand the roughest use.
- Mid-mount carriage provides ultimate push strength and traction.
- Designed for maximum plow lift height.
- Features a self aligning quick-attach system, an easy foot release pedal and an ergonomic handle for plow angle adjustment.
- Plow Roller Fairlead and Plow Limit Switch recommended to extend winch cable lifespan.
- Can-Am ProMount Mounting Plate required for installation.
- Blade swivels left or right, 5 positions.
- Large pin designed for easy blade rotation to eliminate dirt and snow buildup at pivot point.

Can-Am ProMount Mounting Plate

G2, G2L, G2S

715007751

- Required to install the Can-Am ProMount Push Frame with Quick-Attach System.
- Mounting plate precision-designed to stay on year round without compromising ground clearance.
- Fits on ATVs with or without Can-Am Skid Plates.
- Plow Roller Fairlead included.

Can-Am ProMount Push Frame Extension

G2, G2L, G2S

715006257

- 12" (30 cm) push frame extension.
- Required when plow is installed with Apache Track System.

Can-Am ProMount Edge Markers

G2, G2L, G2S

715004206

- Help locate the edges of your plow.
- Height: 24" (60 cm).
- Sold in pairs.
- Compatible with Can-Am ProMount Steel and Flex2 Blades with or without Blade Extensions (except for the Can-Am ProMount Steel 54" (137 cm) Blades).

Can-Am ProMount Drift Cutters

G2, G2L, G2S

715006258

- Help keep snow in the plow.
- Dimensions: 17" x 13" (43.2 cm x 33 cm).
- Sold in pairs.
- Compatible with Can-Am ProMount Steel and Flex2 Blades with or without Blade Extensions (except for the Can-Am ProMount Steel 54" (137 cm) Blades).

Can-Am ProMount Curved Wear Blade

G2, G2L G2S

715007791 · 60" (152 cm)
715007792 · 66" (168 cm)

- Wear blade designed with a folded back bottom lip.
- The increased surface allows for less digging while plowing uneven surfaces.
- Ideal for snow covered gravel, grass, paver stone and other soft surfaces.

Can-Am ProMount Plastic Wear Blade

G2, G2L, G2S

715004480 · 54" (137 cm)
715004481 · 60" (152 cm)
715004482 · 66" (168 cm)
715004483 · 72" (183 cm)

- To help prevent scratches on smooth driveways and markable surfaces.

Can-Am ProMount Blade Extensions

G2, G2L, G2S

■ **715004205** · Black
■ **715005319** · Yellow

- Add 3" (8 cm) each side.
- Compatible with Can-Am ProMount Blades (except for Can-Am ProMount Steel 54" (137 cm) Blade).
- Longer Wear Blade can be installed to further extend the extra length already provided by the extensions.
- Compatible with Can-Am ProMount Steel and Flex2 Blades (except for the Can-Am ProMount Steel 54" (137 cm) Blades).

Back Drag Blade

ProMount Plows (60'' and more)

715007794

- ¼ thick steel swivel scraper.
- Lifts up when the vehicle is moving forward so as not to affect the scraping.
- Increased capacity to pull snow.
- More aggressive scraping in reverse mode.
- Lifts the blade off the ground so that it scrapes evenly.
- Adjustable in length for compatibility with 60 ", 66" and 72" blades.
- Compatible with ProMount blades (Flex and Steel).

Plow Roller Fairlead

G2, G2L, G2S

705009222

- Larger diameter lower roller reduces wear on wire rope for plow application.
- Can be used with all ProMount plows.
- Included in plow mounting plate kit (715007751).

Pulley Kit for Alpine Super-Duty Plow

G2, G2L

715000279

- Pulley kit to be used in conjunction with the winch when using a snow plow.
- Recommended to increase winch efficiency.
- To be used with the XT Front Bumper.

Synthetic Winch Cable for Plowing

715000540

- Specially designed for plowing applications.
- 8' (2.4 m) section of durable, extra-strong synthetic rope.
- Stands up to repeated, sharp angle pulls used to lift heavy plow blades.
- Temporarily replace your winch rope for plow season to save wear and tear on wire rope.

Plow Limit Switch
(Not illustrated)

G2, G2L, G2S

715006259

- For controlling the cable tension when over raising your plow system.
- Prevents winch, plow push frame and vehicle damage.

Can-Am ProMount Plow Angling System

G2, G2L, G2S

715007801

- Converts your plow system into an easy-to-control unit from the driver's seat.
- Using one hand to control all plow motions will allow you to easily concentrate and manage your plowing tasks.
- Compatible with ProMount Blade.
- Push Frame (715007752) is required.
- Push Frame Extension (715006257) is required for installation with the Front Rancher Bumper.
- Winch and plow sold separately.

G3L MODELS

MY24 OUTLANDER PRO HD5 T

Desert Tan

PACKAGE HIGHLIGHTS

- Speed limiter
- Visco-Lok† auto-locking front differential
- 26 in. (66 cm) 6-ply rating tires
- Premium front bumper, rear bumper, full skid plate
- Tow ball
- New comodo with flashers
- LED headlights & Taillights with LED signature

ENGINES	HD5
Type	30 kW (40 hp) / 37 lb-ft, Rotax® ACE (Advanced Combustion Efficiency) 650 cc, single cylinder, liquid cooled
Fuel Delivery System	Intelligent Throttle Control (iTC™) with Electronic Fuel Injection (EFI)
Transmission	pDrive primary CVT with work calibration Extra low L/H/N/R/P
Drive Train	Selectable 2WD / 4WD with Visco-Lok† auto-locking front differential
Driving Assistance	Speed Limiter
Power Steering	N/A
Speed Category	Up to 60 km/h

SUSPENSIONS	
Front Suspension	Double A-arm 9.75 in. (24.8 cm) travel
Front Shocks	Twin tube
Rear Suspension	Double A-arm 10.25 in. (26 cm) travel
Rear Shocks	Twin tube

TIRES & WHEELS	
Front & Rear Tires	6-ply rating 26 x 8/10 x 12 in. (66 x 20.3 / 25.4 x 30.5 cm)
Wheels	12 in. (30.5 cm) steel

BRAKES	
Front	Dual 214 mm disc brakes with hydraulic twin-piston calipers
Rear	Single 214 mm disc brake with hydraulic twin-piston caliper

DIMENSIONS & CAPACITIES	
Estimated Dry Weight*	800 lb (362.9 kg)
L x W x H	89.9 x 48.8 x 57.4 in. (228.4 x 123.9 x 145.6 cm)
Wheelbase	53 in. (134.5 cm)
Ground Clearance	13 in. (33 cm)
Seat Height	38.6 in. (98 cm)
Rack Capacity	Front: 120 lb (54.4 kg) / Rear: 240 lb (109 kg)
Storage Capacity	9 gal (34 L)
Towing Capacity	1,830 lb (830 kg) trailer with brake 870 lb (394 kg) trailer without brakes
Fuel Capacity	5.1 gal (19.5 L)

FEATURES	
Gauge	4.5 in. digital display
Instrumentation	N/A
Ignition	RF Digitally Encoded Security System (D.E.S.S.™)
Lighting	LED headlights and taillights LED signature
Winch	N/A
T-Category features	Towing hitch with trailer plug, directional indicators, position lamps, mirrors, horn
Seat	Standard
Handlebar	Standard
Protection	Premium front bumper, rear bumper, full skid plate

WARRANTY	
Factory Warranty	2-year BRP limited warranty

MY24 OUTLANDER PRO XU HD5

Not sold in Finland or Norway.

Tundra Green

PACKAGE HIGHLIGHTS

- Tri-Mode Dynamic Power Steering (DPS)
- Speed Limiter
- Intelligent Engine Braking (iEB™)
- Visco-4Lok† front differential
- 26 in. (66 cm) XPS Trail King tires with 12 in. (30.5 cm) cast-aluminium wheels
- Premium Front Bumper, Rear Bumper, Full skid plate
- Premium Glovebox with cellphone holder and USB charger

ENGINE	HD5
Type	30 kW (40 hp) / 37 lb-ft, Rotax® ACE (Advanced Combustion Efficiency) 650 cc, single cylinder, liquid cooled
Fuel Delivery System	Intelligent Throttle Control (iTC™) with Electronic Fuel Injection (EFI)
Transmission	pDrive primary CVT with work calibration Extra low L/H/N/R/P
Drive Train	Selectable 2WD / 4WD / Lock 4WD with Visco-4Lok† front differential
Driving Assistance	Intelligent Engine Braking (iEB™) Speed limiter
Power Steering	Tri-Mode Dynamic Power Steering (DPS)
Speed Category	Over 60 km/h

SUSPENSIONS	
Front Suspension	Double A-arm 9.75 in. (24.8 cm) travel
Front Shocks	Twin tube
Rear Suspension	Double A-arm 10.25 in. (26 cm) travel
Rear Shocks	Twin tube

TIRES & WHEELS	
Front & Rear Tires	XPS Trail King, 6-ply rating, 26 x 8/10 x 12 in. (66 x 20.3 / 25.4 x 30.5 cm)
Wheels	12 in. (30.5 cm) cast aluminum

BRAKES	
Front	Dual 214 mm disc brakes with hydraulic twin-piston calipers
Rear	Single 214 mm disc brake with hydraulic twin-piston caliper

DIMENSIONS & CAPACITIES	
Estimated Dry Weight*	883 lb (400.5 kg)
L x W x H	89.9 x 48.8 x 48.2 in. (228.4 x 123.9 x 122.5 cm)
Wheelbase	53 in. (134.5 cm)
Ground Clearance	13 in. (33 cm)
Seat Height	38.6 in. (98 cm)
Rack Capacity	Front: 120 lb (54.4 kg) / Rear: 240 lb (109 kg)
Storage Capacity	9 gal (34 L)
Towing Capacity	1,830 lb (830 kg)
Fuel Capacity	5.1 gal (19.5 L)

FEATURES	
Gauge	4.5 in. digital display
Instrumentation	USB phone charger
Ignition	RF Digitally Encoded Security System (D.E.S.S.™)
Lighting	LED headlights and taillights
Winch	N/A
Seat	Standard
Handlebar	Standard
Protection	Premium front bumper, rear bumper, full skid plate

WARRANTY	
Factory Warranty	2-year BRP limited warranty

MY24 OUTLANDER PRO XU HD5 T

Tundra Green

PACKAGE HIGHLIGHTS

- Tri-Mode Dynamic Power Steering (DPS)
- Speed Limiter
- Intelligent Engine Braking (iEB™)
- Visco-4Lok† front differential
- 26 in. (66 cm) XPS Trail King tires with 12 in. (30.5 cm) aluminium wheels
- Premium Front Bumper, Rear Bumper, Full skid plate
- Premium Glovebox with cellphone holder and USB charger
- 3,500 lb (1,588 kg) winch
- LED headlights & Taillights with LED signature
- Tow Ball & new flashers

ENGINE	HD5
Type	30 kW (40 hp) / 37 lb-ft, Rotax® ACE (Advanced Combustion Efficiency) 650 cc, single cylinder, liquid cooled
Fuel Delivery System	Intelligent Throttle Control (iTC™) with Electronic Fuel Injection (EFI)
Transmission	pDrive primary CVT with work calibration Extra low L/H/N/R/P
Drive Train	Selectable 2WD / 4WD / Lock 4WD with Visco-4Lok† front differential
Driving Assistance	Intelligent Engine Braking (iEB™) Speed limiter
Power Steering	Tri-Mode Dynamic Power Steering (DPS)
Speed Category	Up to 60 km/h

SUSPENSIONS	
Front Suspension	Double A-arm 9.75 in. (24.8 cm) travel
Front Shocks	Twin tube
Rear Suspension	Double A-arm 10.25 in. (26 cm) travel
Rear Shocks	Twin tube

TIRES & WHEELS	
Front & Rear Tires	XPS Trail King, 6-ply rating, 26 x 8/10 x 12 in. (66 x 20.3 / 25.4 x 30.5 cm)
Wheels	12 in. (30.5 cm) cast aluminum

BRAKES	
Front	Dual 214 mm disc brakes with hydraulic twin-piston calipers
Rear	Single 214 mm disc brake with hydraulic twin-piston caliper

DIMENSIONS & CAPACITIES	
Estimated Dry Weight*	816 lb (370.1 kg)
L x W x H	89.9 x 48.8 x 57.4 in. (228.4 x 123.9 x 145.6 cm)
Wheelbase	53 in. (134.5 cm)
Ground Clearance	13 in. (33 cm)
Seat Height	38.6 in. (98 cm)
Rack Capacity	Front: 120 lb (54.4 kg) / Rear: 240 lb (109 kg)
Storage Capacity	9 gal (34 L)
Towing Capacity	1,830 lb (830 kg) trailer with brake 870 lb (394 kg) trailer without brakes
Fuel Capacity	5.1 gal (19.5 L)

FEATURES	
Gauge	4.5 in. digital display
Instrumentation	USB phone charger
Ignition	RF Digitally Encoded Security System (D.E.S.S.™)
Lighting	LED headlights and taillights LED signature
Winch	3,500 lb (1,588 kg) winch
T-Category features	Towing hitch with trailer plug, directional indicators, position lamps, mirrors, horn
Seat	Standard
Handlebar	Standard
Protection	Premium front bumper, rear bumper, full skid plate

WARRANTY	
Factory Warranty	2-year BRP limited warranty

MY24 OUTLANDER PRO XU HD7

Not sold in Finland or Norway.

Tundra Green

PACKAGE HIGHLIGHTS

- Tri-Mode Dynamic Power Steering (DPS)
- Speed Limiter
- Intelligent Engine Braking (iEB™)
- Work / Standard / Sport modes
- Visco-4Lok† front differential
- 26 in. (66 cm) XPS Trail King tires with 12 in. (30.5 cm) cast-aluminium wheels
- Premium Front Bumper, Rear Bumper, Full skid plate
- Premium Glovebox with cellphone holder and USB charger

ENGINE	HD7
Type	37 kW (50 hp) / 41 lb-ft, Rotax® ACE (Advanced Combustion Efficiency) 650 cc, single cylinder, liquid cooled
Fuel Delivery System	Intelligent Throttle Control (iTC™) with Electronic Fuel Injection (EFI)
Transmission	pDrive primary CVT with work calibration Extra low L/H/N/R/P
Drive Train	Selectable 2WD / 4WD / Lock 4WD with Visco-4Lok† front differential
Driving Assistance	Work/Standard/Sport modes Intelligent Engine Braking (iEB™) Speed limiter
Power Steering	Tri-Mode Dynamic Power Steering (DPS)
Speed Category	Over 60 km/h

SUSPENSIONS	
Front Suspension	Double A-arm 9.75 in. (24.8 cm) travel
Front Shocks	Twin tube
Rear Suspension	Double A-arm 10.25 in. (26 cm) travel
Rear Shocks	Twin tube

TIRES & WHEELS	
Front & Rear Tires	XPS Trail King, 6-ply rating, 26 x 8/10 x 12 in. (66 x 20.3 / 25.4 x 30.5 cm)
Wheels	12 in. (30.5 cm) cast aluminum

BRAKES	
Front	Dual 214 mm disc brakes with hydraulic twin-piston calipers
Rear	Single 214 mm disc brake with hydraulic twin-piston caliper

DIMENSIONS & CAPACITIES	
Estimated Dry Weight*	883 lb (400.5 kg)
L x W x H	89.9 x 48.8 x 48.2 in. (228.4 x 123.9 x 122.5 cm)
Wheelbase	53 in. (134.5 cm)
Ground Clearance	13 in. (33 cm)
Seat Height	38.6 in. (98 cm)
Rack Capacity	Front: 120 lb (54.4 kg) / Rear: 240 lb (109 kg)
Storage Capacity	9 gal (34 L)
Towing Capacity	1,830 lb (830 kg)
Fuel Capacity	5.1 gal (19.5 L)

FEATURES	
Gauge	4.5 in. digital display
Instrumentation	USB phone charger
Ignition	RF Digitally Encoded Security System (D.E.S.S.™)
Lighting	LED headlights and taillights
Winch	N/A
Seat	Standard
Handlebar	Standard
Protection	Premium front bumper, rear bumper, full skid plate

WARRANTY	
Factory Warranty	2-year BRP limited warranty

MY24 OUTLANDER PRO XU HD7 T

Tundra Green

PACKAGE HIGHLIGHTS

- Tri-Mode Dynamic Power Steering (DPS)
- Speed Limiter
- Intelligent Engine Braking (iEB™)
- Work / Standard / Sport modes
- Visco-4Lok† front differential
- 26 in. (66 cm) XPS Trail King tires with 12 in. (30.5 cm) aluminium wheels
- Premium Front Bumper, Rear Bumper, Full skid plate
- Premium Glovebox with cellphone holder and USB charger
- 3,500 lb (1,588 kg) winch
- LED headlights & Taillights with LED signature
- Tow Ball & new flashers

ENGINE	HD7
Type	37 kW (50 hp) / 41 lb-ft, Rotax® ACE (Advanced Combustion Efficiency) 650 cc, single cylinder, liquid cooled
Fuel Delivery System	Intelligent Throttle Control (iTC™) with Electronic Fuel Injection (EFI)
Transmission	pDrive primary CVT with work calibration Extra low L/H/N/R/P
Drive Train	Selectable 2WD / 4WD / Lock 4WD with Visco-4Lok† front differential
Driving Assistance	Work/Standard/Sport modes Intelligent Engine Braking (iEB™) Speed limiter
Power Steering	Tri-Mode Dynamic Power Steering (DPS)
Speed Category	Up to 60 km/h

SUSPENSIONS	
Front Suspension	Double A-arm 9.75 in. (24.8 cm) travel
Front Shocks	Twin tube
Rear Suspension	Double A-arm 10.25 in. (26 cm) travel
Rear Shocks	Twin tube

TIRES & WHEELS	
Front & Rear Tires	XPS Trail King, 6-ply rating, 26 x 8/10 x 12 in. (66 x 20.3 / 25.4 x 30.5 cm)
Wheels	12 in. (30.5 cm) cast aluminum

BRAKES	
Front	Dual 214 mm disc brakes with hydraulic twin-piston calipers
Rear	Single 214 mm disc brake with hydraulic twin-piston caliper

DIMENSIONS & CAPACITIES	
Estimated Dry Weight*	816 lb (370.1 kg)
L x W x H	89.9 x 48.8 x 57.4 in. (228.4 x 123.9 x 145.6 cm)
Wheelbase	53 in. (134.5 cm)
Ground Clearance	13 in. (33 cm)
Seat Height	38.6 in. (98 cm)
Rack Capacity	Front: 120 lb (54.4 kg) / Rear: 240 lb (109 kg)
Storage Capacity	9 gal (34 L)
Towing Capacity	1,830 lb (830 kg) trailer with brake 870 lb (394 kg) trailer without brakes
Fuel Capacity	5.1 gal (19.5 L)

FEATURES	
Gauge	4.5 in. digital display
Instrumentation	USB phone charger
Ignition	RF Digitally Encoded Security System (D.E.S.S.™)
Lighting	LED headlights and taillights LED signature
Winch	3,500 lb (1,588 kg) winch
T-Category features	Towing hitch with trailer plug, directional indicators, position lamps, mirrors, horn
Seat	Standard
Handlebar	Standard
Protection	Premium front bumper, rear bumper, full skid plate

WARRANTY	
Factory Warranty	2-year BRP limited warranty

MY24 OUTLANDER PRO XU HD7 T ABS

Tundra Green

PACKAGE HIGHLIGHTS

- Tri-Mode Dynamic Power Steering (DPS)
- Anti-Lock Braking System (ABS)
- Speed Limiter
- Intelligent Engine Braking (iEB™)
- Work / Standard / Sport modes
- Visco-4Lok† front differential
- 26 in. (66 cm) XPS Trail King tires with 12 in. (30.5 in.) cast-aluminium wheels
- Premium Front Bumper, Rear Bumper, Full skid plate
- Premium Glovebox with cellphone holder and USB charger
- 3,500 lb (1,588 kg) winch
- LED headlights with LED signature
- Tow Ball & new flashers

ENGINE	HD7
Type	37 kW (50 hp) / 41 lb-ft, Rotax® ACE (Advanced Combustion Efficiency) 650 cc, single cylinder, liquid cooled
Fuel Delivery System	Intelligent Throttle Control (iTC™) with Electronic Fuel Injection (EFI)
Transmission	pDrive primary CVT with work calibration Extra low L/H/N/R/P
Drive Train	Selectable 2WD / 4WD Visco-Lok† ABS (Open differential) with BTC (Brake torque Control)
Driving Assistance	Work/Standard/Sport modes Intelligent Engine Braking (iEB™) Speed limiter
Power Steering	Tri-Mode Dynamic Power Steering (DPS)
Speed Category	More than 60 km/h

SUSPENSIONS	
Front Suspension	Double A-arm 9.75 in. (24.8 cm) travel
Front Shocks	Twin tube
Rear Suspension	Double A-arm 10.25 in. (26 cm) travel
Rear Shocks	Twin tube

TIRES & WHEELS	
Front & Rear Tires	XPS Trail King, 6-ply rating, 26 x 8/10 x 12 in. (66 x 20.3 / 25.4 x 30.5 cm)
Wheels	12 in. (30.5 cm) cast aluminum

BRAKES	
Front	Dual 214 mm disc brakes with hydraulic twin-piston calipers
Rear	Single 214 mm disc brake with hydraulic twin-piston caliper

DIMENSIONS & CAPACITIES	
Estimated Dry Weight*	833.6 lb (378.1 kg)
L x W x H	89.9 x 48.8 x 57.4 in. (228.4 x 123.9 x 145.6 cm)
Wheelbase	53 in. (134.5 cm)
Ground Clearance	13 in. (33 cm)
Seat Height	38.6 in. (98 cm)
Rack Capacity	Front: 120 lb (54.4 kg) / Rear: 240 lb (109 kg)
Storage Capacity	9 gal (34 L)
Towing Capacity	1,830 lb (830 kg) trailer with brake 870 lb (394 kg) trailer without brakes
Fuel Capacity	5.1 gal (19.5 L)

FEATURES	
Gauge	4.5 in. digital display
Instrumentation	USB phone charger
Ignition	RF Digitally Encoded Security System (D.E.S.S.™)
Lighting	LED headlights and taillights LED signature
Winch	3,500 lb (1,588 kg) winch
T-Category features	Towing hitch with trailer plug, directional indicators, position lamps, mirrors, horn
Seat	Standard
Handlebar	Standard
Protection	Premium front bumper, rear bumper, full skid plate

WARRANTY	
Factory Warranty	2-year BRP limited warranty

MY24 OUTLANDER MAX PRO XU HD7 T

Tundra Green

PACKAGE HIGHLIGHTS

- Tri-Mode Dynamic Power Steering (DPS)
- Speed Limiter
- Intelligent Engine Braking (iEB™)
- Work / Standard / Sport modes
- Visco-4Lok† front differential
- 26 in. (66 cm) XPS Trail King tires with 12 in. (30.5 cm) cast-aluminium wheels
- Premium Front Bumper, Rear Bumper, Full skid plate
- Premium Glovebox with cellphone holder and USB charger
- 3,500 lb (1,588 kg) winch
- LED headlights & Taillights with LED signature
- Tow Ball & new flashers

ENGINE	HD7
Type	37 kW (50 hp) / 41 lb-ft, Rotax® ACE (Advanced Combustion Efficiency) 650 cc, single cylinder, liquid cooled
Fuel Delivery System	Intelligent Throttle Control (iTC™) with Electronic Fuel Injection (EFI)
Transmission	pDrive primary CVT with work calibration Extra low L/H/N/R/P
Drive Train	Selectable 2WD / 4WD / Lock 4WD with Visco-4Lok† front differential
Driving Assistance	Work/Standard/Sport modes Intelligent Engine Braking (iEB™) Speed limiter
Power Steering	Tri-Mode Dynamic Power Steering (DPS)
Speed Category	Up to 40 km/h or up to 60 km/h

SUSPENSIONS	
Front Suspension	Double A-arm 9.75 in. (24.8 cm) travel
Front Shocks	Twin tube
Rear Suspension	Double A-arm 10.25 in. (26 cm) travel
Rear Shocks	Twin tube

TIRES & WHEELS	
Front & Rear Tires	XPS Trail King, 6-ply rating, 26 x 8/10 x 12 in. (66 x 20.3 / 25.4 x 30.5 cm)
Wheels	12 in. (30.5 cm) cast aluminum

BRAKES	
Front	Dual 214 mm disc brakes with hydraulic twin-piston calipers
Rear	Single 214 mm disc brake with hydraulic twin-piston caliper

DIMENSIONS & CAPACITIES	
Estimated Dry Weight*	918 lb (416.4 kg)
L x W x H	94.2 x 47.6 x 57.4 in. (239.2 x 120.9 x 145.6 cm)
Wheelbase	60.4 in. (153.5 cm)
Ground Clearance	12.5 in. (31.8 cm)
Seat Height	38.6 in. (98 cm)
Rack Capacity	Front: 120 lb (54.4 kg) / Rear: 240 lb (109 kg)
Storage Capacity	9 gal (34 L)
Towing Capacity	1,830 lb (830 kg) trailer with brake 870 lb (394 kg) trailer without brakes
Fuel Capacity	5.1 gal (19.5 L)

FEATURES	
Gauge	4.5 in. digital display
Instrumentation	USB phone charger
Ignition	RF Digitally Encoded Security System (D.E.S.S.™)
Lighting	LED headlights and taillights LED signature
Winch	3,500 lb (1,588 kg) winch
T-Category features	Towing hitch with trailer plug, directional indicators, position lamps, mirrors, horn
Seat	Standard
Handlebar	Standard
Protection	Premium front bumper, rear bumper, full skid plate

WARRANTY	
Factory Warranty	2-year BRP limited warranty

MY24 OUTLANDER MAX DPS 500 T ABS

Granite Gray

PACKAGE HIGHLIGHTS

- Tri-Mode Dynamic Power Steering (DPS)
- Anti-lock Braking System (ABS)
- Visco-Lok† QE auto-locking front differential
- Full skid plate
- Tow ball
- Horn, flashers and mirrors

ENGINE	500
Type	30 kW (40 hp) / 37 lb-ft, Rotax® ACE (Advanced Combustion Efficiency) 650 cc, single cylinder, liquid cooled
Fuel Delivery System	Intelligent Throttle Control (iTC™) with Electronic Fuel Injection (EFI)
Transmission	pDrive primary CVT L/H/N/R/P
Drive Train	Selectable 2WD / 4WD Visco-Lok† ABS (Open differential) with BTC (Brake torque Control)
Driving Assistance	N/A
Power Steering	Tri-Mode Dynamic Power Steering (DPS)
Speed Category	More than 60 km/h

SUSPENSIONS	
Front Suspension	Double A-arm 9.75 in. (24.8 cm) travel
Front Shocks	Twin tube
Rear Suspension	Double A-arm 10.25 in. (26 cm) travel
Rear Shocks	Twin tube

TIRES & WHEELS	
Front & Rear Tires	25 x 8/10 x 12 in. (63.5 x 20.3 / 25.4 x 30.5 cm)
Wheels	12 in. (30.5 cm) cast-aluminum

BRAKES	
Front	Dual 214 mm disc brakes with hydraulic twin-piston calipers
Rear	Single 214 mm disc brake with hydraulic twin-piston caliper

DIMENSIONS & CAPACITIES	
Estimated Dry Weight*	802.6 lb (364.1 kg)
L x W x H	94.2 x 47.6 x 56.9 in. (239.2 x 120.9 x 144.6 cm)
Wheelbase	60.4 in. (153.5 cm)
Ground Clearance	12 in. (30.5 cm)
Seat Height	38.6 in. (98 cm)
Rack Capacity	Front: 120 lb (54.4 kg) / Rear: 240 lb (109 kg)
Storage Capacity	9 gal (34 L)
Towing Capacity	1,830 lb (830 kg) trailer with brake 870 lb (394 kg) trailer without brakes
Fuel Capacity	5.1 gal (19.5 L)

FEATURES	
Gauge	4.5 in. digital display
Instrumentation	N/A
Ignition	RF Digitally Encoded Security System (D.E.S.S.™)
Lighting	LED headlights and taillights LED signature
Winch	N/A
Seat	Standard
T-Category features	Towing hitch with trailer plug, directional indicators, position lamps, mirrors, horn
Handlebar	Standard
Protection	Full skid plate

WARRANTY	
Factory Warranty	2-year BRP limited warranty

MY24 OUTLANDER MAX DPS 700 T ABS

Not sold in Sweden.

Legion Red

PACKAGE HIGHLIGHTS

- Tri-Mode Dynamic Power Steering (DPS)
- Anti-lock Braking System (ABS)
- Work / Standard / Sport modes
- Visco-Lok† QE auto-locking front differential
- Full skid plate
- Tow ball
- Horn, flashers and mirrors

ENGINE	700
Type	37 kW (50 hp) / 41 lb-ft, Rotax® ACE (Advanced Combustion Efficiency) 650 cc, single cylinder, liquid cooled
Fuel Delivery System	Intelligent Throttle Control (iTC™) with Electronic Fuel Injection (EFI)
Transmission	pDrive primary CVT L/H/N/R/P
Drive Train	Selectable 2WD / 4WD Visco-Lok† ABS (Open differential) with BTC (Brake torque Control)
Driving Assistance	Work / Standard / Sport modes
Power Steering	Tri-Mode Dynamic Power Steering (DPS)
Speed Category	More than 60 km/h

SUSPENSIONS	
Front Suspension	Double A-arm 9.75 in. (24.8 cm) travel
Front Shocks	Twin tube
Rear Suspension	Double A-arm 10.25 in. (26 cm) travel
Rear Shocks	Twin tube

TIRES & WHEELS	
Front & Rear Tires	25 x 8/10 x 12 in. (63.5 x 20.3 / 25.4 x 30.5 cm)
Wheels	12 in. (30.5 cm) cast-aluminum

BRAKES	
Front	Dual 214 mm disc brakes with hydraulic twin-piston calipers
Rear	Single 214 mm disc brake with hydraulic twin-piston caliper

DIMENSIONS & CAPACITIES	
Estimated Dry Weight*	802.6 lb (364.1 kg)
L x W x H	94.2 x 47.6 x 56.9 in. (239.2 x 120.9 x 144.6 cm)
Wheelbase	60.4 in. (153.5 cm)
Ground Clearance	12 in. (30.5 cm)
Seat Height	38.6 in. (98 cm)
Rack Capacity	Front: 120 lb (54.4 kg) / Rear: 240 lb (109 kg)
Storage Capacity	9 gal (34 L)
Towing Capacity	1,830 lb (830 kg) trailer with brake 870 lb (394 kg) trailer without brakes
Fuel Capacity	5.1 gal (19.5 L)

FEATURES	
Gauge	4.5 in. digital display
Instrumentation	N/A
Ignition	RF Digitally Encoded Security System (D.E.S.S.™)
Lighting	LED headlights and taillights LED signature
Winch	N/A
T-Category features	Towing hitch with trailer plug, directional indicators, position lamps, mirrors, horn
Seat	Standard
Handlebar	Standard
Protection	Full skid plate

WARRANTY	
Factory Warranty	2-year BRP limited warranty

2024 OUTLANDER MAX XT 700 T ABS

Platinum Satin

PACKAGE HIGHLIGHTS

- Tri-Mode Dynamic Power Steering (DPS)
- Anti-lock Braking System (ABS)
- Work / Standard / Sport modes
- Visco-Lok† QE auto-locking front differential
- Full skid plate
- Tow ball
- Horn, flashers and mirrors
- Painted Plastics

ENGINE	700
Type	37 kW (50 hp) / 41 lb-ft, Rotax® ACE (Advanced Combustion Efficiency) 650 cc, single cylinder, liquid cooled
Fuel Delivery System	Intelligent Throttle Control (iTC™) with Electronic Fuel Injection (EFI)
Transmission	pDrive primary CVT L/H/N/R/P
Drive Train	Selectable 2WD / 4WD Visco-Lok† ABS (Open differential) with BTC (Brake torque Control)
Driving Assistance	Work / Standard / Sport modes
Power Steering	Tri-Mode Dynamic Power Steering (DPS)
Speed Category	More than 60 km/h

SUSPENSIONS	
Front Suspension	Double A-arm 9.75 in. (24.8 cm) travel
Front Shocks	Twin tube
Rear Suspension	Double A-arm 10.25 in. (26 cm) travel
Rear Shocks	Twin tube

TIRES & WHEELS	
Front & Rear Tires	XPS Trail Force 26 x 8/10 x 14 in. (66 x 20.3 / 25.4 x 35.6 cm)
Wheels	14 in. (35.6 cm) cast-aluminum

BRAKES	
Front	Dual 214 mm disc brakes with hydraulic twin-piston calipers
Rear	Single 214 mm disc brake with hydraulic twin-piston caliper

DIMENSIONS & CAPACITIES	
Estimated Dry Weight*	910.6 lb (413.1 kg)
L x W x H	94.2 x 47.6 x 57.4 in. (239.2 x 120.9 x 145.6 cm)
Wheelbase	60.4 in. (153.5 cm)
Ground Clearance	12 in. (30.5 cm)
Seat Height	38.6 in. (98 cm)
Rack Capacity	Front: 120 lb (54.4 kg) / Rear: 240 lb (109 kg)
Storage Capacity	9 gal (34 L)
Towing Capacity	1,830 lb (830 kg) trailer with brake 870 lb (394 kg) trailer without brakes
Fuel Capacity	5.1 gal (19.5 L)

FEATURES	
Gauge	4.5 in. digital display
Instrumentation	USB Phone charger
Ignition	RF Digitally Encoded Security System (D.E.S.S.™)
Lighting	LED headlights and taillights LED signature
Winch	3,500 lb (1,588 kg) winch
T-Category features	Towing hitch with trailer plug, directional indicators, position lamps, mirrors, horn
Seat	Standard
Handlebar	Standard
Protection	Front and Rear Bumper, Full Skid plate

WARRANTY	
Factory Warranty	2-year BRP limited warranty

MY24 OUTLANDER X MR 700

Not sold in Norway.

Legion Red

PACKAGE HIGHLIGHTS

- Snorkeled CVT intake and exhaust
- Relocated radiator
- Tri-Mode Dynamic Power Steering (DPS)
- Work / Standard / Sport modes
- Visco-4Lok† front differential
- 28 in. (71.1 cm) XPS Swamp King tires 14 in. (35.6 cm) aluminum wheels
- Front Bumper, Full skid plate, X mr footpegs
- Premium Glovebox with cellphone holder and USB charger

ENGINE	700
Type	37 k W (50 hp) / 41 lb-ft, Rotax® ACE (Advanced Combustion Efficiency) 650 cc, single cylinder, liquid cooled with strategically positioned engine air intake
Fuel Delivery System	Intelligent Throttle Control (iTC™) with Electronic Fuel Injection (EFI)
Transmission	pDrive primary CVT with strategically positioned air intake and exhaust Extra low L/H/N/R/P
Drive Train	Selectable 2WD / 4WD / Lock 4WD with Visco-4Lok† front differential
Driving Assistance	Work / Standard / Sport modes
Power Steering	Tri-Mode Dynamic Power Steering (DPS)
Speed Category	Over 60 km/h

SUSPENSIONS	
Front Suspension	Double A-arm 9 in. (22.9 cm) travel
Front Shocks	Twin tube
Rear Suspension	Double A-arm 9.75 in. (24.8 cm) travel
Rear Shocks	Twin tube

TIRES & WHEELS	
Front & Rear Tires	XPS Swamp King 28 x 8/10 x 14 in. (71.1 x 20.3 / 25.4 x 35.6 cm)
Wheels	14 in. (35.6 cm) aluminum

BRAKES	
Front	Dual 214 mm disc brakes with hydraulic twin-piston calipers
Rear	Single 214 mm disc brake with hydraulic twin-piston caliper

DIMENSIONS & CAPACITIES	
Estimated Dry Weight*	876 lb (397.3 kg)
L x W x H	89.9 x 48.8 x 48.2 in. (228.4 x 123.9 x 122.5 cm)
Wheelbase	53 in. (134.5 cm)
Ground Clearance	13 in. (33 cm)
Seat Height	38.6 in. (98 cm)
Rack Capacity	Front: 120 lb (54.4 kg) / Rear: 240 lb (109 kg)
Storage Capacity	1 gal (3.8 L)
Towing Capacity	1,830 lb (830 kg)
Fuel Capacity	5.1 gal (19.5 L)

FEATURES	
Gauge	4.5 in. digital display
Instrumentation	USB phone charger
Ignition	RF Digitally Encoded Security System (D.E.S.S.™) with cord
Lighting	LED headlights and taillights
Winch	N/A
Seat	Standard
Handlebar	Standard
Protection	Front bumper, X mr footpegs, full skid plate

WARRANTY	
Factory Warranty	2-year BRP limited warranty

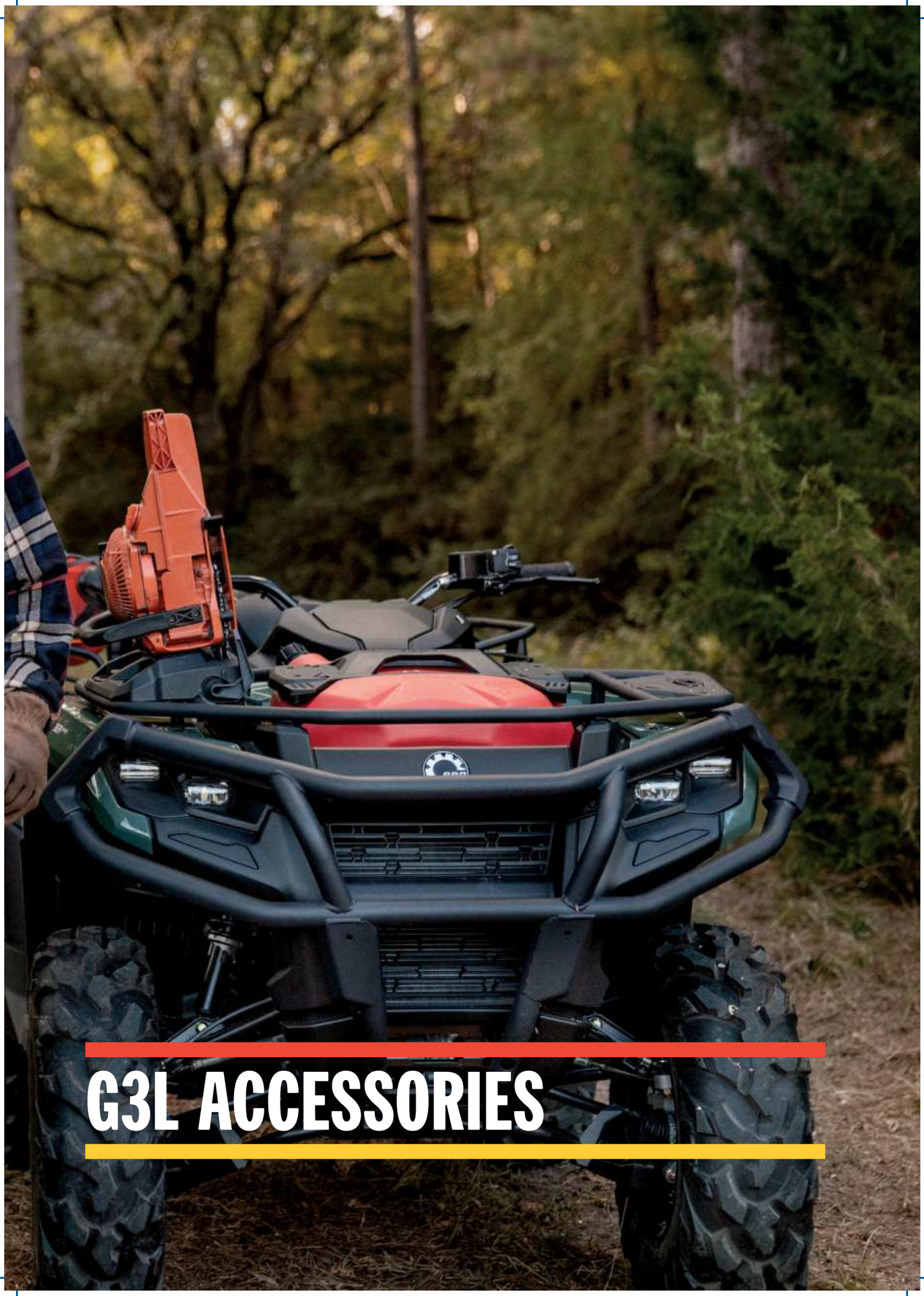

G3L ACCESSORIES

G3L ACCESSORIES

LinQ: Easy On, Easy Off Cargo	80
Cargo & Storage	86
Can-Am Windshields	86
Handlebars & Mirrors	87
Skid Plates	88
Bumpers & Guards	89
Electrical & Lights	90
Winches	93
Hitches	94
Performance	95
Covers & Add-ons	96
Apache Track Systems	97
Promount Plows	99

BUNDLE UP TO NEVER COMPROMISE. YOUR ATV BUNDLES.

STEP 1: CHOOSE YOUR ESSENTIAL BUNDLE

		G3L	G3L MAX
STARTER	Console Extension	715005368	715005368
	Console Extension USB Power Outlet	715008750	715008750
	LinQ Cargo Box (53 L)	715006997	715006997
	LinQ Tool Kit	715006829	715006829
ADVANCED	Fender Flares	715006336	715006336
	Driver Full Wrap Handguards	715005361	715005361
	LinQ Modular Box (10 L)	715005494	715005494
PEAK	Bluetooth Handlebar Soundbar by MTX	219400840	219400840
	Adventure High Windshield	715005377	715005377

STEP 2: PICK YOUR ADD-ON BUNDLE

		G3L	G3L MAX
ADVENTURE	LinQ Stackable Fuel Caddy - 4 Gallons	860202246	860202246
	XT Rear Bumper	715004953	715004953
	XT Front Bumper	715004952	715004952
HUNT	3.5" (9 cm) LED Driving Lights (2 x 14 W)	715003666	715003666
	LinQ Gun Case	715004968	715004968
	XU Front Bumper	715006614	715006614
	LinQ Gear Grips	715005340	715005340
WORK	LinQ Chainsaw Holder	715004975	715004975
	LinQ Rack Extension	715004954	715004954
	LinQ Tool Holder	715007358	715007358
WINTER	Integrated Heated Grips & Thumb Throttle Combo	715005072	715005072
	Adventure Side Wind Deflectors	715005862	715005862
	Heated Visor Outlet	715001246	715001246
	Heated Passenger Grips & Visor Outlet	N/A	715005358
	Trailering Cover	715005074	715005075

LINQ ACCESSORIES: EASY ON, EASY OFF CARGO

- No tools needed: Quickly install and remove accessories by hand.
- Equip your Can-Am vehicle for specialized tasks in no time.
- Sturdy mounting system that holds up to the roughest terrain.

G3L

LinQ Accessories with 16" Base	1 Front Cargo Compartment	2 Front Rack	3 Rear Cargo Compartment	4 Rear Rack	LinQ Can Stack on Top
LinQ 4.2 Gal (16 L) Cooler 219400964 • Black / 295100698 • White	YES, with LinQ Base Installation Kit **860201806** Can be installed inside* or on the front cargo compartment.	NO	YES, with LinQ Base Installation Kit **860201806**	NO	NO
LinQ Tool Box 715008111					
LinQ SR 5.5 Gal (21 L) Bag 860202449	YES, with LinQ Base Installation Kit **860201806** Must be installed on the front cargo compartment lid only.				
LinQ 4.5 Gal (17 L) Sport Bag 860202447	YES, with LinQ Base Installation Kit **860201806** Can be installed inside* or on the front cargo compartment.				
LinQ Modular Box (10 L) 715005494					YES
LinQ Modular Box (20 L) 715007112					
LinQ Modular Box (30 L) 715006830					NO
LinQ Tool Kit 715006829					YES
LinQ Roll-Top Bag 715008110	YES, with LinQ Base Installation Kit **860201806** Must be installed on the front cargo compartment lid only.				NO
LinQ Fuel Caddy - 4 Gallons 860202246	YES, with LinQ Base Installation Kit **860201806** Must be installed inside* the front cargo compartment only.		NO		
LinQ Oil Caddy - 1 Gallon 860202445					
LinQ Gun Case 715004968	YES, with LinQ Base Installation Kit **860201806** Must be installed on the front cargo compartment lid.				

LinQ Accessories with 36" Base	Front Cargo Compartment	Front Rack	Rear Cargo Compartment	Rear Rack	LinQ Can Stack on Top
LinQ Large Cargo Box 715007001	NO	NO	NO	YES	NO
LinQ Cargo Basket (90 L) 715005274		YES			
LinQ Cargo Box (53 L) 715006997					YES
LinQ Low Profile Box (63 L) 715007827					
LinQ Trunk Box (139 L) 715006097		NO	YES, remove the rear rack for installation.	NO	NO
LinQ Trunk Box (145 L) 715005273					YES
LinQ 9.2 Gal (35 L) Cooler 715006998		YES	NO	YES	NO
LinQ Gun Case 715004968				NO	

LinQ Holders and Racks	Front Cargo Compartment	Front Rack	Rear Cargo Compartment	Rear Rack	LinQ Can Stack on Top
LinQ Gear Grips 715005340	YES, with LinQ Base Installation Kit **860201806**	YES	YES, with LinQ Base Installation Kit **860201806**	YES	NO
LinQ Tool Holder 715007358					
LinQ Rack Extension 715004954	NO		NO		
LinQ Chainsaw Holder 715004975	YES	NO		NO	

**Removal of front cargo compartment lid is required.*

LINQ ACCESSORIES: EASY ON, EASY OFF CARGO

- No tools needed: Quickly install and remove accessories by hand.
- Equip your Can-Am vehicle for specialized tasks in no time.
- Sturdy mounting system that holds up to the roughest terrain.

G3L MAX

LinQ Accessories with 16" Base	1 Front Cargo Compartment	2 Front Rack	3 Rear Cargo Compartment	4 Rear Rack	LinQ Can Stack on Top
LinQ 4.2 Gal (16 L) Cooler 219400964 • Black / 295100698 • White	YES, with LinQ Base Installation Kit **860201806** Can be installed inside* or on the front cargo compartment.	NO	NO	NO	NO
LinQ Tool Box 715008111					
LinQ SR 5.5 Gal (21 L) Bag 860202449	YES, with LinQ Base Installation Kit **860201806** Must be installed on the front cargo compartment lid only.				
LinQ 4.5 Gal (17 L) Sport Bag 860202447	YES, with LinQ Base Installation Kit **860201806** Can be installed inside* or on the front cargo compartment.		YES, with LinQ Base Installation Kit **860201806**		
LinQ Modular Box (10 L) 715005494			NO		YES
LinQ Modular Box (20 L) 715007112					
LinQ Modular Box (30 L) 715006830					NO
LinQ Tool Kit 715006829					YES
LinQ Roll-Top Bag 715008110	YES, with LinQ Base Installation Kit **860201806** Must be installed on the front cargo compartment lid only.				NO
LinQ Fuel Caddy - 4 Gallons 860202246	YES, with LinQ Base Installation Kit **860201806** Must be installed inside* the front cargo compartment only.				
LinQ Oil Caddy - 1 Gallon 860202445					
LinQ Gun Case 715004968	YES, with LinQ Base Installation Kit **860201806** Must be installed on the front cargo compartment lid.				

LinQ Accessories with 36" Base	Front Cargo Compartment	Front Rack	Rear Cargo Compartment	Rear Rack	LinQ Can Stack on Top
LinQ Large Cargo Box 715007001	NO	NO	NO	YES	NO
LinQ Cargo Basket (90 L) 715005274		YES			
LinQ Cargo Box (53 L) 715006997					YES
LinQ Low Profile Box (63 L) 715007827					
LinQ Trunk Box (139 L) 715006097		NO	YES, remove the rear rack for installation.	NO	NO
LinQ Trunk Box (145 L) 715005273					YES
LinQ 9.2 Gal (35 L) Cooler 715006998		YES	NO	YES	NO
LinQ Gun Case 715004968				NO	

LinQ Holders and Racks	Front Cargo Compartment	Front Rack	Rear Cargo Compartment	Rear Rack	LinQ Can Stack on Top
LinQ Gear Grips 715005340	YES, with LinQ Base Installation Kit **860201806**	YES	YES, with LinQ Base Installation Kit **860201806**	YES	NO
LinQ Tool Holder 715007358					
LinQ Rack Extension 715004954	NO		NO		
LinQ Chainsaw Holder 715004975	YES	NO		NO	

**Removal of front cargo compartment lid is required.*

LinQ Accessories with 16" Base

LinQ Fuel Caddy - 4 Gallons

G3L | **860202246**

- Quick, easy and secure installation with LinQ system.
- No-spill spout for easy use.
- 3.7 US gallon (14 L) capacity.
- Meet the new latest Flame Mitigation Device (FMD) standard.
- Must be installed in the Front Cargo Compartment.
- LinQ Base Installation Kit (860201806) required.
- No LinQ 16'' accessories can be stacked on the LinQ 4-Gallon Fuel Caddy.
- Check local regulations regarding fuel transportation

LinQ Oil Caddy - 1 Gallon

G3L | **860202445**

- 1 US gallon (3.78 L) capacity.
- Must be installed in the Front Cargo Compartment.
- LinQ Base Installation Kit (860201806) required.
- No LinQ 16'' accessories can be stacked on the LinQ 1-Gallon Oil Caddy.

LinQ Chainsaw Holder

G3L (except X mr models) | **715004975**

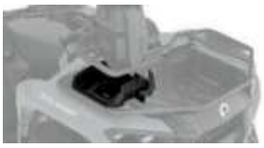

- This system installs a chainsaw vertically to save space on the rack and serves as a scabbard for storage.
- Pinch the blade for a solid and quick fix.
- Compatible with the majority of chainsaws available on the market as most blades go up to 18".
- Compatible with all 16" LinQ accessories that fit in the front cargo compartment.
- Allows installation of the LinQ Tool Holder.
- Not compatible with the LinQ Rack Extension when installed on the front rack of the vehicle.

LinQ Modular Box

G3L | **715005494** · (10 L) | **715007112** · (20 L) | **715006830** · (30 L)

- Allows stacking of other modular boxes to always have the right gear accessible.
- Always have the right box size to fit everything.
- Can be installed on any LinQ Base with a 16" width.
- See table for installation location and requirements.

Thermal Insert for LinQ Modular Box (10 L)

G3L | **219401110**

- Insulated liner.
- Fits very well in the LinQ Modular Box (10 L).
- Can contain seven 355 ml cans.
- Keeps ice cold for one day.
- Interior dimensions : 9" L x 17" W x 2½" H.

LinQ Tool Kit

G3L | **715006829**

- Includes:
  - Cutter pliers
  - Long-nose pliers
  - Locking pliers
  - Ratchet wrench ⅜" drive
  - 6" ratchet extension
  - Integrated CVT belt storage location (belt not included)
  - Long-socket 19 mm ⅜" drive - 6 pts
  - Socket 18 mm ⅜" drive
  - Long-socket 17 mm ⅜" drive - 6 pts
  - Socket 15 mm ⅜" drive
  - Socket 13 mm ⅜" drive
  - Socket 10 mm ⅜" drive
  - Socket 8 mm ⅜" drive
  - Combined wrench 19 mm
  - Combined wrench 18 mm
  - Combined wrench 15 mm
  - Combined wrench 13 mm
  - Combined wrench 10 mm
  - Combined wrench 8 mm
  - Socket Torx T40 ⅜" drive
  - Socket Torx T30 ⅜" drive
  - Socket Torx T20 ⅜" drive
  - Breaker bar ⅜" drive
- See table for installation location and requirements.

LinQ 4.2 Gal (16 L) Cooler

G3L | ■ **219400964** · Black | ■ **295100698** · White

- All the benefits of LinQ—simple, fast and secure.
- Rotomolded construction for exceptional rigidity and durability.
- Premium-quality foam insulation for optimal ice retention.
- Uses LinQ mounting system (Patent US 8777531 and US 8875830).
- Easy one-second on/off toolless system.
- Can contain twenty 355 ml cans.
- Keeps ice cold for three days.
- Exterior dimensions: 13" L x 20" W x 10" H.
- Interior dimensions : 9" L x 17" W x 7" H.
- See table for installation location and requirements.

LinQ Tool Box

G3L | **715008111**

- High precision injected HDPE construction provides rigidity and durability.
- 5 gal (19 L) maximum capacity.
- Weather-resistant, sealed and lockable cover.
- Marinized for salt water purposes.
- See table for installation location and requirements.

LinQ Roll-Top Bag

G3L | **715008110**

- Fully waterproof roll-top dry bag will securely store and confine your equipment.
- LinQ mounted using heavy-duty rigid plastic base.
- High capacity storage solution 10.6 gal (40 L).
- Bottom foam liner for additional equipment protection.
- Integrated handle for easy transportation on/off the vehicle.
- Marinized for salt water purposes.
- Dimensions: 14" L x 19" W x adjustable H.
- See table for installation location and requirements.

SR 5.5 Gal (21 L) LinQ Bag

G3L | **860202449**

- Semi-rigid expandable bag.
- 5.5 gal (21 L) capacity.
- See table for installation location and requirements.

LinQ 4.5 Gal (17 L) Sport Bag

G3L | **860202447**

- 4.5 gal (17 L) capacity.
- Rigid bottom, semi-rigid top.
- See table for installation location and requirements.

LinQ Accessories with 36" Base

LinQ Trunk Box (145 L)

G3L (except MAX models) | **715005273**

- Polyethylene Trunk Box replacing the rear rack for perfect integration and to increase cargo capacity.
- Storage capacity of 31 gal (145 L).
- Easy to install and remove with the LinQ system.
- LinQ anchors must be installed in the rear cargo compartment (4 LinQ anchors included).
- Possibility to install LinQ 16'' accessories on the cover to increase the cargo capacity.
- New ergonomic and resistant latch system offers excellent sealing.
- Ability to install LinQ Tool Holders (715008896) on the box.
- Lockable with a lock on the front of the box (two keys included).

LinQ Trunk Box (139 L)

G3L (MAX models only) | **715006097**

- Polyethylene Trunk Box replacing the rear rack for perfect integration and to increase cargo capacity.
- Storage capacity of 30 gal (139 L).
- Easy to install and remove with the LinQ system.
- LinQ anchors must be installed in the rear cargo compartment (4 LinQ anchors included).
- Compatible with the passenger seat.
- New ergonomic and resistant latch system offers excellent sealing.
- Ability to install LinQ Tool Holders (715008896) on the box.
- Lockable with a lock on the front of the box (two keys included).

LinQ Cargo Box (53 L)

G3L | **715006997**

- Made of polyethylene.
- Storage capacity of 14 gal (53 L).
- Easy to install and remove with the LinQ system.
- Can be installed on the front or rear racks.
- New ergonomic and resistant latch system offers excellent sealing.
- Possibility to install LinQ 16" accessories on the cover and increase the cargo capacity.
- Ability to install LinQ Tool Holders (715008896) on the box.
- Lockable with a lock on the front of the box (two keys included).

NEW LinQ Low Profile Box (63 L)

G3L | **715007827**

- Made of impact-resistant injected polypropylene and weatherproof, this box has a storage capacity of 16.6 gal (63 L).
- LinQ-mounted for efficient and secure storage, it is locked in place with only a quarter turn. Easy to install, easy to remove using the LinQ system.
- Can be installed in a 36" configuration only.
- LinQ 16" accessories can be installed on the cover to increase cargo capacity.
- Easily carried with the rigid handle. The anti-vibration system prevents the handle from moving while riding.
- Support feet at hinge level so the box can stand on its own.
- The compact design allows for maximum rear field of vision.
- Features a lock on the front of the box (two keys included).

LinQ Cargo Basket (90 L)

G3L | **715005274**

- Made of polyethylene.
- Storage capacity of 23 gal (90 L).
- Easy to install and remove with the LinQ system.
- Can be installed on the front or rear racks.
- Six handles on the contour to easily install bungee cords.
- Ability to install LinQ Tool Holders (715008896) to the basket.

Installation of some accessories shown may impact vehicle compliance with some regulations. Consult your local dealer for information.

Large Cargo Box

G3L | **715007001**

- Rear bed to carry large items.
- Anchor points (D-ring), LinQ fixtures for tool holder, and marks to allow the installation of a 16" accessory.
- Also has a mat for the floor and slot to enable the installation of a divider and a slot for a divider to close the recess on the rear vertical lip.
- It is installed on ATV platforms through the LinQ system and hooks to make it easily installable and removable.

Installation of some accessories shown may impact vehicle compliance with some regulations. Consult your local dealer for information.

NEW LinQ 9.2 Gal (35 L) Cooler

G3L | **715006998**

- LinQ-mounted for efficient and secure storage, locked in place with only a quarter turn.
- Easy to install, easy to remove using the LinQ system.
- Installation in LinQ 36" configuration.
- Made of polyethylene for exceptional rigidity and durability.
- Storage capacity of 9.2 gal (35 L).
- Lock the cooler on the vehicle using the LinQ Lock (860201968).
- Premium-quality foam insulation for optimal ice retention.
- Option to add a 5-slot LinQ Lite Rail on the side and at the rear of the cooler.
- A dry basket is included to protect your food from water.
- Drain plug at the bottom to get rid of excess water.
- The new ergonomic and resistant latch system ensures the top is tightly sealed.
- Innovative way to hold 12 cans (355 ml).
- Molded-in handles for quick installation and removal.

LinQ Rack Extension

G3L | **715004954**

- Easy to install and remove with the LinQ system.
- Fits front or rear of the vehicle.
- Provides tie-down points to secure cargo on racks.
- Made of steel with anti-corrosion coating and durable powder-coat finish.
- Height of 7".

LinQ Holders

LinQ Tool Holder

G3L | **715007358**

- Ultra-versatile tool holder.
- Convenient swivel-latch allows tools to be stored in any orientation.
- Sold in pairs.

LinQ Gear Grips

G3L | **715005340**

- Durable and flexible grips provide a custom fit for a variety of items from 1" to 4" (2.5 cm to 10 cm) in diameter.
- Heavy-duty design for carrying bows, fishing poles, rakes, farm tools and more.
- Quick-release button opens grip quickly for easy access to gear.
- Heavy-duty base system built for the toughest adventures.
- Make transporting your tools a snap by combining the Gear Grips with the LinQ system.
- 360° orientation.
- Sold in pairs.

LinQ Gear Grips

G3L | **715001421**

- Durable, flexible grips cushion and protect while providing a custom fit for a variety of items from 1" to 4" (2.5 cm to 10 cm) in diameter.
- Heavy-duty design for carrying bows, fishing poles, rakes, farm tools and more.
- Quick-release button opens grip quickly for easy access to gear.
- Heavy-duty base system built for the toughest adventures.
- Easy installation on tubular racks, extension racks, brackets or bumpers.
- Sold in pairs.

LinQ Gun Case

G3L | **715004968**

- The practical design lets riders store shotguns and rifles up to 52" (132 cm), even with most optic configurations.
- Adapts to different weapon shapes and features with foam cushions that can be repositioned.
- The Gun Case is LinQ-mounted for efficient and secure storage, and is locked in place with only a quarter turn.
- The LinQ Gun Case must be installed on the front compartment lid using the LinQ Base Installation Kit (860201806), on the Front Rack or on fender position using the LinQ Gun Case Mounting Kit (715006074).

NEW LinQ Gun Case Mounting Kit - Fender Position

G3L | **715006074**

- This kit is required to install the LinQ Gun Case on fender position on G3L, G3L MAX and X mr models.
- Installs on the right side of the vehicle, and the safety system allows the driver or passenger to quickly exit the vehicle.
- The low-profile mounting system can be left on the vehicle year-round and doesn't get in the way when the Gun Case is not installed.

Holders

Tool Holder Bolt-On

G3L | **715008896**

- Tool Holder is made to fit the LinQ Cargo Basket (90 L), LinQ Cargo Box (53 L), LinQ Trunk Box (139 L) and LinQ Trunk Box (145 L).
- Convenient swivel-latch allows tools of all shapes to be stored in the proper orientation.
- Sold in pairs.
- Several degrees of adjustment.

Multi-Fit Holder

G3L | **715002354** · Single | **715001945** · Double

- Open U-shaped bracket for carrying tools (shovel, axe) and hunting weapons (rifle, bow) that are safely secured, but easily accessible.
- Easy installation on tubular rack, extension racks, basket or bumpers.
- Sold in pairs.
- For G2, the LinQ Rack Extension (715001711) is required.

LinQ Mounting

LinQ Base Installation Kit

G3L | **860201806**

- Unique mounting fastener usable on any LinQ system accessory.
- Included: 2 cargo LinQ bases and hardware.

LinQ Base

G3L | **715002350**

- Made of polypropylene glass fiber.
- Allows you to install LinQ accessories.
- Sold in pack of 4.

LinQ Lock

G3L | **860201968**

- Simple way to securely lock most LinQ accessories.
- Lock cover protects lock from the elements.
- Corrosion resistant.
- Pack of 1, includes 2 keys.
- Not compatible with LinQ 4.2 US Gal (16 L) Cooler, LinQ Tool Box, LinQ Tool Holder and LinQ Gear Grips.

CARGO & STORAGE

Soft Storage Bag (70 L)

G3L | **715007002**

- Carry your gear in a weatherproof bag.
- Soft bag with a storage capacity of 18.5 gal (70 L) designed to maximize space in the front or rear of the vehicle.
- 3-compartment bag with removable dividers.
- Easy to install with strap system.
- X mr models: Fits on rear rack only.

CAN-AM WINDSHIELDS

Adventure High Windshield - Hardcoated

G3L (except X mr models) | **715007268**

- Adventure windshield with three-position adjustable height.
- 14" (36 cm) high to protect against wind and winter weather.
- Made of injected polycarbonate with a thickness of 5⁄32" (4 mm) with ultra-resistant Quantum† coating.
- Provides excellent optical clarity and better abrasion resistance.
- Console Extension (715005368) is required for installation.
- Side Wind Deflectors (715005862) available for added protection.

Installation of some accessories shown may impact vehicle compliance with some regulations. Consult your local dealer for information.

Adventure High Windshield

G3L (except X mr models) | **715005377**

- Adventure windshield with three-position adjustable height.
- 14" (36 cm) high to protect against wind and weather.
- Made of injected polycarbonate with a thickness of 5⁄32" (4 mm).
- Console Extension (715005368) is required for installation.
- Side Wind Deflectors (715005862) available for added protection.

Installation of some accessories shown may impact vehicle compliance with some regulations. Consult your local dealer for information.

Adventure Low Windshield

G3L (except X mr models) | **715005860**

- Adventure windshield with three-position adjustable height.
- 10 in (25 cm) high for wind protection.
- Made of injected polycarbonate with a thickness of 5⁄32" (4 mm).
- Console Extension (715005368) is required for installation.
- Side Wind Deflectors (715005862) available for added protection.

Installation of some accessories shown may impact vehicle compliance with some regulations. Consult your local dealer for information.

Adventure Side Wind Deflectors

G3L (except X mr models) | **715005862**

- Side Wind Deflectors for additional wind protection.
- Easy installation.
- Console Extension (715005368) is required for installation.
- Works with Adventure Windshields (715005860, 715005377, 715007268).
- Not compatible with Integrated Audio System (715005354).

Console Extension

G3L (except X mr models)

715005368

- Integrated storage compartment (1 gal/4 L) with magnetic mount safe for your electronic device.
- Robust injected fiber-reinforced-polypropylene construction makes it easy to fit and install.
- 25 times stronger than any smartphone's weight, so you can ride through rough terrain confidently.
- Two possible positions for your electronic device: portrait and landscape.
- Includes everything needed for installation on your favorite electronic devices: two pre-assembled Can-Am plates with 3M multi-surface adhesive.
- Includes guide clips molded into the door to pass the charging cable.
- Possibility of installing USB outlet in storage compartment (USB power outlet sold separately).
- Required for the installation of the Adventure windshield and side wind deflectors.
- Not compatible with Snorkel Kit.
- Includes tether cord for additional peace of mind.

Console Extension USB Power Outlet

G3L (except X mr models)

715008750

- Useful for the Console Extension (715005368) to plug your electronic device charger into the compartment.
- USB-A and USB-C ports.
- Rubber cap protects ports when not in use.
- Backlit to highlight the USB ports.
- Console Extension (715005368) is required for installation.

HANDLEBARS & MIRRORS

Driver Full Wrap Handguards

G3L

■ **715005361** · Black
■ **715005362** · Neo Yellow

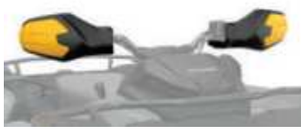

- Protects against wind, branches and debris.
- Rugged injected plastic deflectors with Can-Am logo.
- Lightweight black die cast aluminum full wrap frame.
- New ergonomic design offers better comfort for the hand and increases protection.
- Mounting system leaves the handlebar free.
- Includes complete hardware.

Passenger Wind Deflectors

G3L (MAX models only)

715001669

- These wind deflectors fit on the passenger handles and provide greater comfort while riding.
- Easy to install and remove.

Handlebar Mirrors

G3L

715005366

- Adjustable handlebar mounted convex mirrors.
- The convex surface allows improved visibility with a wider field of view.
- Doesn't require a windshield or fairing to be mounted.
- Works with all windshield options.

SKID PLATES

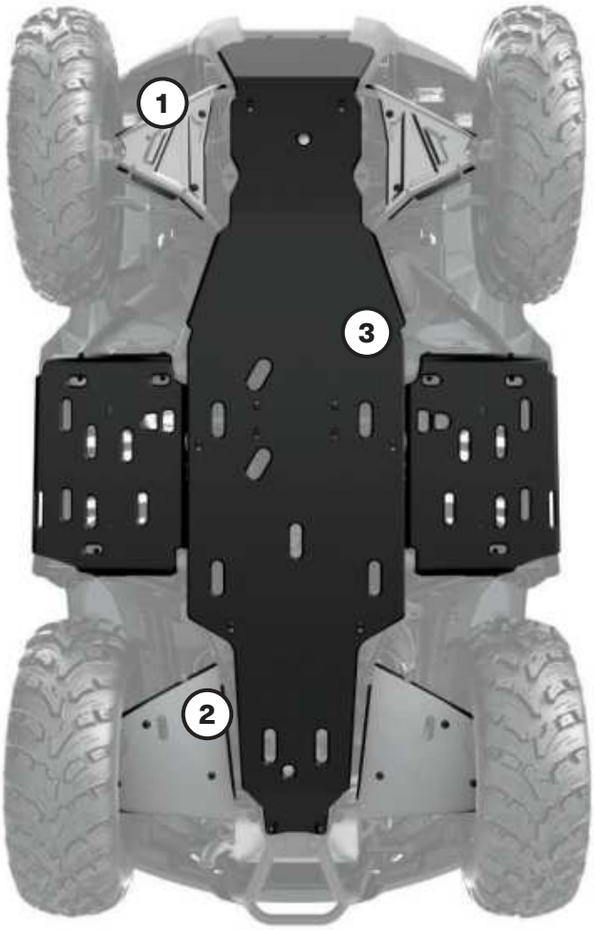

OUTLANDER

G3L	
2023	
Except MAX models	MAX models only
Skid Plate Protection Kit	
715005309	715005310
Individual Skid Plates	
① **Front Aluminum A-Arm Protectors**	
715005305	715005305
② **Rear Aluminum A-Arm Protectors**	
715005308	715005308
③ **HMWPE Underbelly Plates**	
715005306	715005307

Our Skid Plates deliver the durability, strength, and reliability your adventures need. Protect the underbelly of your vehicle from front to rear, with folded ends at the footwells for a little extra. They combine materials for peak protection: with aluminum A-arms and a plastic underbelly, your ride can drive across rough terrain confidently.

- Quick and easy, bolt-on installation.
  No need to remove factory skid plates.
  No more rivets or rivnuts.
- Thicker underbelly plates (10 mm).

BUMPERS & GUARDS

Bumpers

XU Front Bumper

G3L	**715006614**

- Heavy-duty tubular construction provides the most complete protection for your vehicle.
- Protects vehicle lights and corners.
- Winch compatible.
- Integrated tow hook.
- Similar to the XU model's bumper.

XT Front Bumper

G3L	**715004952**

- Provides additional protection for your vehicle against the elements.
- Tough and durable.
- Large tube construction with black powder coat finish.
- Similar to stock bumper on XT models.
- Mounting plate included for tow hook.

Extreme Front Bumper Plate

G3L (except X mr models)	**715005439**

- Ultra-robust construction provides additional protection to the front of the vehicle in rough terrain.
- Compatible with all front bumpers.
- Not compliant with T-category

Front Tow Hook

G3L	**715008842**

- Provides a solid anchor when towing is needed or when transporting the vehicle.
- Allows you to attach most hooks or straps.
- This tow hook offers 3,500 lb (1,587 kg) of towing capacity.
- Made of forged steel.
- XT Front Bumper (715004952) required for installation.

Full Rear Bumper

G3L	**715008738**

- Provides additional protection for your vehicle against obstacles.
- Protects the rear lights of the vehicle without obstructing them.
- Strong and durable, it must be added to the XT rear bumper (stock or accessory) for full protection.
- Wide and sturdy tubular construction with black powder-coat finish and metal corners.

XT Rear Bumper

G3L (STD, DPS & X mr models only)	**715004953**

- Sturdy tubular construction.
- Protects the vehicle against obstacles.
- Standard on Outlander XT and Outlander PRO.
- Fits base models with grab bar only.
- Required to install the Full Rear Bumper.

Guards

Fender Flares

G3L	**715005349** • (Except T-category models) **715006336** • (T-category models only)

- Kit is designed to deliver extra protection to your vehicle from dirt and debris. If you enjoy riding in the mud, it's a must.
- Made of injected plastic that hugs your vehicle fenders perfectly.
- Gives vehicle added flair for a rugged, cool look.
- Includes front and rear extensions and all mounting hardware.

ELECTRICAL & LIGHTS

Integrated Heated Grips & Thumb Throttle Combo

G3L | **715005072**

- Heat levels for grips and thumb displayed on vehicle screen.
- Ergonomic button integrated on LH grip.
- Single button for both grips and thumb heat selection.
- Five temperature settings for the thumb and grips.
- Adjustable heat ratio between grip and thumb warmer.
- Hold button to reach maximum heat quickly.
- Remembers your last heat setting.
- IP67-rated waterproof sealing keeps the elements out.
- ECE compliant.
- Plug-and-play installation.
- Clamp-on grips, no glue required.

Heated Passenger Grips & Visor Outlet

G3L (MAX models only) | **715005358**

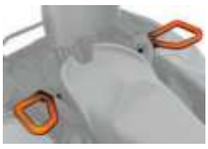

- Replace your stock passenger handles.
- Dual temperature switch integrated into seat arm for 3-zone heated handles and grips.
- Heated visor outlet integrated into seat arm.

Seat Heater

G3L | **715007211**

- 25 W seat heater delivers chill-free riding comfort.
- One temperature only.
- Heated pad and electrical harness only.
- Heavy-Duty Seat Cover (715008311) is required for installation on 1-up models.
- Heavy-Duty Seat Cover (715008313) is required for installation on 2-up models.

Heated Visor Outlet

G3L | **715001246**

- Strategically positioned on vehicle to maintain your agility.
- Optional visor outlet that delivers fog-free riding.
- Quick and easy installation.
- Sold individually.
- Heated Visor not included.

USB Intelligent Power Outlet Kit

G3L | **715009117**

- Power all your electronics with this easy-to-mount USB plug.
- Provides one USB-A3.0 and one USB C (PD) plug.
- Power rate: 36 watts.
- Intelligent USB charger for a fast charge when battery is low.
- Replaces the vehicle's 12 V socket.

NEW Cellphone Holder

G3L | **715008786**

- Water resistant door allows for perfect phone positioning.
- Features capacitive and resistive touch screen technology.
- Spring system in back plate automatically adjusts for thickness.
- Fits all cellphones within 7.2" (185 mm) x 3.3" (85 mm) x 0.6" (15 mm) dimensions.
- Works with almost all charger wires.
- Does not include cellphone or charging wires.
- Requires the GPS RAM Mount for Handlebar (715001985) or the Console Extension (715005368) for installation.
- If installed on the Console Extension, the Console Extension USB Power Outlet (715008750) is required to charge cellphone.
- If installed on the Console Extension, Driver Full Wrap Handguards (715005361 or 715005362) are incompatible.

GPS RAM† Mount for Handlebar

G3L | **715001985**

- Convenient bracket for installing the Garmin Montana GPS (715002830) or the Cellphone Holder (715008786) (not included) onto your unit's handlebar.

NEW Integrated Audio System

G3L | **715005354**

- Fully integrated and weatherproof audio system.
- Includes two 6.5" front fender Bluetooth speakers giving you fingertip control of the tracks you're playing.
- Designed to be Can-Am tough in the most demanding riding conditions.
- Expertly tuned for exceptional sound, even when you're on the move on your Outlander.
- Comes with two speakers, each with 50 W dynamic power, for a total of 100 W dynamic power.
- Seamless integration and operation from any Bluetooth-enabled devices, or via an auxiliary port.
- Plug-and-play audio system specifically designed not to drain the battery.
- Compatible with the Console Extension (715005368) and Adventure Windshields.
- Not compatible with the Adventure Side Wind Deflectors (715005862).
- EC compliant.

Note: We recommend you use 320 Kbps MP3 - 192-256 Kbps AAC or AIFF, WAV formats to match the potential of the speaker. More compressed formats will probably have degraded sound quality.

Bluetooth Handlebar Soundbar by MTX

G3L | **219400840**

- Bluetooth speaker with the unbeatable convenience of fingertip control.
- Rugged IP66-rated weather-resistant speaker designed for outdoor use.
- Driven by 150 watts of quality audio power.
- Seamless integration and operation from Bluetooth enabled devices.
- Includes input, ground and ignition wires, plus auxiliary port and 3.5" (8.89 cm) connector cable.
- Not compatible with XT Handlebar Protector Kit.
- EC compliant.

Note: We recommend you use 320 Kbps MP3 - 192-256 Kbps AAC or AIFF, WAV formats to match the potential of the speaker. More compressed formats will probably have degraded sound quality.

3.5" (9 cm) LED Lights (2 X 14 W) LED Driving Lights

G3L | **715003666**

- 14 W LED lights producing 1,260 lumens each.
- Equipped with 6 high power LEDs in a heavy-duty die cast aluminum housing.
- Features 2 attachment points — if one attachment point fails due to a collision, rotate to the next channel point and re-mount the light.
- Sold in pairs.
- CE certified.
- Spot lens for a narrow and long light beam spread, ideal when driving at higher speeds.
- XT or XU Front Bumpers (715004952 and 715006614) and Light Power Cable (715005353) required for installation.
- Can also be installed on the stock front bumpers (XT and XU).

3.5" (9 cm) LED Lights (2 X 14 W) LED Flood Lights

G3L | **715003665**

- 14 W LED lights producing 1,260 lumens each.
- Equipped with 6 high power LEDs in a heavy-duty die cast aluminum housing.
- Features 2 attachment points — if one attachment point fails due to a collision, rotate to the next channel point and re-mount the light.
- Sold in pairs.
- CE certified.
- Flood lens for a wide light beam spread, ideal for working applications like plowing or for cornering, dusty or foggy riding conditions.
- XT or XU Front Bumpers (715004952 and 715006614) and Light Power Cable (715005353) required for installation.
- Can also be installed on the stock front bumpers (XT and XU).

10" (25 cm) Double Stacked LED Light Bar (60 W)

G3L | **715002933**

- Equipped with 12 5 W Cree LEDs.
- 5,400 lumens.
- Rugged and waterproof.
- Packs a big punch for its size.
- Not EC compliant.
- XT or XU Front Bumpers (715004952 and 715006614) and Light Power Cable (715005353) required for installation.
- Can also be installed on the stock front bumpers (XT and XU).

15" (38 cm) Double Stacked LED Light Bar (90 W)

G3L | **715002934**

- Equipped with 18 5 W Cree LEDs. 8,400 lumens.
- Complements the Light Racks and most bumpers.
- Rugged and waterproof.
- Lights up to more than 1,900 ft (580 m) in front of the vehicle and around 65 ft (20 m) wide on each side.
- Not EC compliant.
- XT Front Bumper (715004952) and Light Power Cable (715005353) are required for installation.
- Can also be installed on the stock front bumpers (XT and XU).

Light Power Cable
(Not illustrated)

G3L | **715005353**

- Required for installation of the 10" (25 cm) and 15" (38 cm) LED Light Bars, as well as the 3.5" (9 cm) LED Lights.

RAM† LED Spotlight

G3L | **710005423**

- 540 lumen LED light (9 W) heavy-duty spotlight standard-equipped with 1" (2.5 cm) diameter rubber-coated double ball and socket system.
- Not EC compliant

Battery Charger/Maintainer

715005061

- Keeps stored lead-acid batteries charged.
- Charges and maintains small batteries.
- Microprocessor controlled multi-stage charging for added precision, safety and battery life.
- Automatically detects 6- or 12-volt batteries.
- Reverse hook-up protection helps protect battery and charger from damage.
- Auto-voltage detection.
- Press the display button to show the charge progress.
- Content: 3 amp battery charger, clamp adapter, DC adapter, 24" (61 cm) fused ring leads harness with weather cap, owner's manual.
- US plug (110 V)
- Not available in Europe

Jump Starter

715005062

- IPX3 water-resistant and enclosed output ports.
- 4 LED battery indicators for easy read on battery charge level.
- Compact design, will conveniently fit in your backpack, glove box or any other storage compartment.
- Ideal for powersports, motorcycles and 4 or 6 cylinder engines.
- 2.4A + 1A/5V USB ports for fast charging of all USB devices.
- Smart cable provides protection against reverse polarity, short circuit, low voltage, high temperature and reverse charging.
- Built-in LED light (3 modes).
- Content: 300CA jump starter, SA858 smart cable clamp, MC-USB to USB charging cable, travel bag, user manual.
- Not EC compliant.
- Not available in Europe

Quick Connect Battery Cable

715005408

- Quickly and easily connect and charge different items with your charger.
- Included in the Battery Charger/Maintainer (715005061).
- Sold individually.
- Not available in Europe

Quick Connect Cable with Battery Indicator

715006055

- Quickly and easily connect and charge different batteries with your charger.
- 3-color LED indicator provides constant battery health indication.
- Sold individually.
- Not available in Europe.

C-TEK charger

860200997

- · CTEK, the manufacturer of the smartest battery chargers in the world, has produced a BRP specific charger for all BRP products.
- · Charger is built to meet the demanding arctic conditions.
- · Ask your dealer for more information.

WINCHES

Can-Am HD Winches

Can-Am HD 2500 Winch

G3L | **715006973**

- Ergonomic clutch handle.
- Rugged all-steel gears and bushings for more torque and longer life.
- Automatic 100% load-holding brake.
- Corded 10 ft. (3 m) weather sealed wired remote control (sold separately).
- Pulling strength capability of 2,500 lb (1,134 kg).
- 50 ft. of 3⁄16" (15.2 m of 4.8 mm) wire steel cable.
- Heavy-duty 4-way roller fairlead.
- Weather-sealed handlebar-mounted switch.
- Sealed solenoid for all-weather protection.
- Plug-and-play wiring.
- A-armsEC and UKCA compliant.

Can-Am HD 3500 Winch

G3L | **715006974**

- Ergonomic clutch handle.
- Rugged all-steel gears and bushings for more torque and longer life.
- Automatic 100% load-holding brake.
- Corded 10 ft. (3 m) weather sealed wired remote control (sold separately).
- Pulling strength capability of 3,500 lb (1,588 kg).
- 50 ft. of 7⁄32" (15.2 m of 5.2 mm) wire steel cable.
- Heavy-duty 4-way roller fairlead.
- Weather-sealed handlebar-mounted switch.
- Sealed solenoid for all-weather protection.
- Plug-and-play wiring.
- A-armsEC and UKCA compliant.

Can-Am HD 3500-S Winch

G3L | **715008285**

- Ergonomic clutch handle.
- Rugged all-steel gears and bushings for more torque and longer life.
- Automatic 100% load-holding brake.
- Corded 10 ft. (3 m) weather sealed, wired remote control (sold separately).
- Pulling strength capability of 3,500 lb (1,588 kg).
- 50 ft. of 3⁄16" (15.2 m of 4.8 mm) synthetic rope.
- Heavy-duty hawse fairlead.
- Weather-sealed handlebar-mounted switch.
- Sealed solenoid for all-weather protection.
- Plug-and-play wiring.
- A-armsEC and UKCA compliant.

Winch Accessories

Can-Am HD Wired Remote Control

Can-Am HD Winches (715008140/715008141/715006973/715009674/715008285) | **715008121**

- This kit allows owners to add a handheld remote to their winch or a stock winch.
- Works with the handlebar-mounted switch.
- Wired Remote and Remote Socket included.
- 10 ft. wire.

Winch Accessories Kit

715002409

- Get the most out of your winch.
- Double your pulling power, change your pulling direction and keep your winch in proper working order.
- Includes tree straps, snatch block, shackle and winching gloves.

HITCHES

Hitches

Front Receiver Hitch

G3L | **715004977**

- Installs easily. No drilling required.
- This hitch offers a 1,500 lb (680 kg) towing capacity.
- Allows you to maneuver your trailer easily in tight, confined areas.
- Hitch bar sold separately.

Rear Hitch Drawbar Kit

G3L | **715006230**

- Works on 2" (5 cm) standard receiver hitch.
- Offers a towing capacity of 3.8 kN (R = 750 kg).
- 50 mm Hitch Ball included.
- Forged steel.
- For European vehicles only.

Front and Rear Hitch Drawbar

G3L | **715008350**

- Standard on 2" (5 cm) receiver hitch.
- It offers 1,650 lb (750 kg) of towing capacity.
- Hitch ball not included.
- Forged steel.
- Not compliant with T-category.

Hitch Accessories

Rubber Receiver Plug

705204503

- Rubber cap for 2" (5 cm) hitch receiver.

PERFORMANCE

Performance

NEW Snorkel Kit

G3L | **715005073**

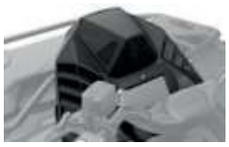

- Comprehensive snorkel kit for extended air intakes and CVT exhaust.
- The CVT outlet integrates into the pod cover.
- Ideal when riding in muddy conditions.
- Not compatible with windshields.
- Can be installed with the Integrated Audio System (715005354).
- Not compliant with T-category.

NEW Radiator Relocator Kit

G3L | **715004943**

- Relocates radiator to top mount position.
- Prevents cooling performance loss in muddy conditions.
- Allows riders to open the relocator hood for easy radiator cleaning.
- Engineered for easy cooling system bleeding and maintenance.
- Includes support, hardware and hoses. Uses existing radiator: radiator not included.
- Not compliant with T-category.

Mud Strap

G3L | **715003053**

- Convenient sturdy grab-handle.
- Lets drivers redistribute their weight for improved traction in demanding conditions.
- Not compatible with XT Handlebar Protector Kit (703100352).

Radiator Protector

G3L (except X mr models) | **715005333**

- Metal shield mounts over radiator face and protects vehicle from stones and branches.
- Slides easily out of its holder for easy cleaning.

NEW Heavy Duty Spring Kits

G3L (except MAX & X mr models) | **715008202** · Front, **715004942** · Rear

- Allows riders to replicate the standard HD5/HD7 suspension setup on the Outlander 500/700 (1-up).
- The heavy-duty springs improve handling and provide enhanced stiffness, which is perfect for snow clearing and hauling heavy loads.
- Two springs included in the kit.

NEW Aluminum Footpeg Kit

G3L | **715008199**

- Provides maximum integrated grip and stability during vigorous riding.
- The kick-up end gives riders added grip during hard cornering.
- Made of aluminum, sold in pairs.

Emergency Accessories

Emergency Kit

715006102

- Complete emergency kit provides all essential equipment and supplies to get out of most unfavorable situations powersport enthusiasts may find themselves in.
- Includes jumper cables, air compressor, tire-repair kit, first-aid kit, ratchet tie-down, duct tape, 3,300 lb (1,500 kg) tow strap, zip-ties and cloth rags.

COVERS & ADD-ONS

NEW Heavy-Duty Seat Cover

G3L (except MAX models) | **715008311**

- Heavy-duty materials to cover and protect the seat.
- Designed to fit the vehicle's lines perfectly.
- Abrasion- and tear-resistant.
- Easily installed by stretching around the original seat: the elastic holds the cover securely in place.

NEW Heavy-Duty Seat Cover

G3L (MAX models only) | **715008313**

- Heavy-duty materials to cover and protect the seat.
- Designed to fit the vehicle's lines perfectly.
- Abrasion- and tear-resistant.
- Easily installed by stretching around the original seat: the elastic holds the cover securely in place.

Trailering Cover

G3L (except MAX models)	**715005074**
G3L (MAX models only)	**715005075**

- Weather-resistant trailering cover protects your vehicle during storage and transportation.
- Heavy-duty canvas made of UV-resistant solution-dyed polyester.
- Inner soft liner protects windshield and colored panels from abrasion.
- Quick and easy clip-on installation.
- Designed with the vehicle to fit its lines perfectly for less wind resistance and less water accumulation.
- Can be installed with or without Can-Am accessories.

Flag

715000277 · Yellow

- Make sure everyone knows what you're riding.
- Perfect for dunes and new riders.
- 8-ft. (2.4 m) length.
- Includes flag mount (715000127).

Flag Mount
(Not illustrated)

715000127

Ratchet Tie-Downs

715008309 · Black/Gray

- 400 lb (181 kg) safe working load.
- 1" x 10' (2.5 cm x 3 m) strap with Can-Am, Sea-Doo, and Ski-Doo logos.
- Deluxe ratchet with rubber handle.
- Coated S hooks.
- Pack of 2.

Heavy-Duty Ratchet Tie-Down

715008308

- 1,000 lb (454 kg) safe working load.
- 1.5" x 6' (38 mm x 1.8 m) strap with BRP brands.
- Deluxe ratchet with rubber handle.
- Black-coated clip hooks.
- 12" (300 mm) webbing included.
- Pack of two.

APACHE TRACK SYSTEMS

APACHE TRACK SYSTEMS FITTING GUIDE

Apache Backcountry

Model Year / Model		Track	Track Mount	Track DPS Module	Engine Pre-filter	CVT Pre-filter
2023	G3L	**715005247**	**715004993**	**715007338** (without iTC) OR **715006266** (with iTC)	**715008314**	Not required

Apache 360 and Apache 360 LT

Model Year / Model		Track	Track Mount	Track DPS Module	Engine Pre-filter	CVT Pre-filter
2023	G3L	**715006323** (Apache 360) OR **715005103** (Apache 360 LT)	**715004992**	**715007338** (without iTC) OR **715006266** (with iTC)	**715008314**	Not required

Apache Backcountry

Apache Backcountry Track System | G3L | **715005247**

- Designed to deliver the best flotation level and deep-snow performance on the market.
- Contact patch is 23% bigger than the Apache 360 LT.
- Impressive added ground clearance of 7" (18 cm), keeps the vehicle out of deep snow.
- Aggressive track design with 2" (5 cm) lug height for maximum traction on snow.
- Apache Backcountry Mounting Kit and engine and air intake pre-filters are required.
- For winter use only.

Installation of some accessories shown may impact vehicle compliance with some regulations. Consult your local dealer for information.

Idler Wheel Kit | Apache Backcountry Track System (rear tracks only) | **860201230** · 141 mm

- Reduces drag and rolling resistance.
- Includes 2 wheels, brackets and hardware.
- Add up to 2 kits per rear track.
- Can extend slider life in hardened snow conditions.

Rail Ice Scratchers | Apache Backcountry Track System | **860201728**

- Provide additional lubrication in hard and icy conditions.
- Rail mounted, small, light.
- Design expands on coil concept to allow reversing without damage.
- Easily stored when not in use.

Apache 360 & 360 LT

Apache 360 Track System

G3L | **715006323**

- Multifunctional tracks perfect for any Can-Am ATV.
- Average ground clearance of 16" (41 cm).
- 1" (2.5 cm) lugs in the front and 1.25" (3.2 cm) in the back.
- Apache 360 and 360 LT Mounting Kit and engine and air intake pre-filters are required.
- EC compliant.

Installation of some accessories shown may impact vehicle compliance with some regulations. Consult your local dealer for information.

Apache 360 LT Track System

G3L | **715005103**

- Multifunctional tracks designed to support heavy loads and to fit on most Can-Am Off-Road vehicles.
- Front wheel height adjustment provides enhanced attack angle and better performance over rough terrain when raised or increased contact patch for improved flotation when lowered.
- Average ground clearance of 16" (41 cm).
- 1" (2.5 cm) lugs in the front and 1.25" (3.2 cm) in the back.
- Reliable heavy-duty build.
- EC compliant.
- Contact patch is 7 to 9% bigger than the Apache 360's.
- Apache 360 and 360 LT Mounting Kit, Track DPS Module and Engine and air intake pre-filters are required.

Installation of some accessories shown may impact vehicle compliance with some regulations. Consult your local dealer for information.

Apache Accessories

Apache Backcountry Mounting Kit
(Not illustrated)

G3L | **715004993**

- Required to install Apache Backcountry Track System.
- DPS module and pre-filter not included.
- Improved installation time and switch seasons faster than ever.

Installation of some accessories shown may impact vehicle compliance with some regulations. Consult your local dealer for information.

Apache 360 & 360 LT Mounting Kit
(Not illustrated)

G3L | **715004992**

- Required to install Apache 360 and 360 LT Track Systems.
- DPS module and pre-filter not included.
- Improved installation time and switch seasons faster than ever.

Installation of some accessories shown may impact vehicle compliance with some regulations. Consult your local dealer for information.

Track DPS Module
(Not illustrated)

G3L (with iTC) | **715006266**

- An innovative DPS module that ensures speedometer accuracy and optimized steering assist, which make for perfect track control and riding ease.
- Required to install the Apache and Backcountry Track Systems.

Installation of some accessories shown may impact vehicle compliance with some regulations. Consult your local dealer for information.

PROMOUNT PLOWS

PROMOUNT PLOW KITS

Steel – Reference Chart

	54" Black Steel	54" Yellow Steel	60" Black Steel	60" Yellow Steel	66" Black Steel	66" Yellow Steel	72" Black Steel	72" Yellow Steel
Plow Kit	715006202	715006206	715006203	715006207	715006205	715006208	—	—
Blade	715004472	715005316	715004202	715005317	715006337	715006338	715004474	715006021
Push Frame	715004980	715004980	715004980	715004980	715004980	715004980	715004980	715004980
Mounting Kit	715009483	715009483	715009483	715009483	715009483	715009483	715009483	715009483

Flex2 – Reference Chart

	60" Flex2	66" Flex2	72" Flex2
Plow Kit	715006204	715008206	—
Blade	715004203	715006265	715004485
Push Frame	715004980	715004980	715004980
Mounting Plate	715009483	715009483	715009483

Steel Plows

Can-Am ProMount 54" (137 cm)
Steel Plow Kit

G3L

■ **715006202** · Black
■ **715006206** · Yellow

This kit includes:
- Can-Am ProMount Steel Blade
- Push Frame with Quick-Attach System
- Mounting Kit
- Plow Roller Fairlead

Can-Am ProMount 60" (152 cm)
Steel Plow Kit

G3L

■ **715006203** · Black
■ **715006207** · Yellow

This kit includes:
- Can-Am ProMount Steel Blade
- Push Frame with Quick-Attach System
- Mounting Kit
- Plow Roller Fairlead

Can-Am ProMount 66" (168 cm)
Steel Plow Kit

G3L

■ **715006205** · Black
■ **715006208** · Yellow

This kit includes:
- Can-Am ProMount Steel Blade
- Push Frame with Quick-Attach System
- Mounting Kit
- Plow Roller Fairlead

Can-Am ProMount Steel Blades 54" (137 cm) Blade

Fits ProMount Push Frame

■ **715004472** · Black
■ **715005316** · Yellow

- Blades available individually to create your own kit.
- Compatible with Can-Am ProMount Blade accessories to further enhance plow versatility (some plow accessories are not compatible with 54" (137 cm) plows).
- Not compatible with ProMount Drift Cutters, Blade Extensions and Edge Markers.
- Clears 50" (127 cm) when plow is fully angled.
- Blade height of 14.75" (37 cm).

Can-Am ProMount Steel Blades 60" (152 cm) Blade

Fits ProMount Push Frame

■ **715004202** · Black
■ **715005317** · Yellow

- Blades available individually to create your own kit.
- Compatible with Can-Am ProMount Blade accessories to further enhance plow versatility.
- Clears 54" (137 cm) when plow is fully angled.
- Blade height of 17" (43 cm).

Can-Am ProMount Steel Blades 66" (168 cm) Blade

Fits ProMount Push Frame

■ **715006337** · Black
■ **715006338** · Yellow

- Blades available individually to create your own kit.
- Compatible with Can-Am ProMount Blade accessories to further enhance plow versatility.
- Clears 60" (152 cm) when plow is fully angled.
- Blade height of 17" (43 cm).

Can-Am ProMount Steel Blades 72" (183 cm) Blade

Fits ProMount Push Frame

■ **715004474** · Black
■ **715006021** · Yellow

- Blades available individually to create your own kit.
- Compatible with Can-Am ProMount Blade accessories to further enhance plow versatility.
- Clears 66" (168 cm) when plow is fully angled.
- Blade height of 17" (43 cm).

Can-Am ProMount Flex2 Plow Kit

Can-Am ProMount 60" (152 cm) Flex2 Plow Kit

G3L

■ **715006204** · Black

This kit includes:
- Can-Am ProMount Flex2 Blade
- Push Frame with Quick-Attach System
- Mounting Kit
- Plow Roller Fairlead

Can-Am ProMount 66" (168 cm) Flex2 Plow Kit

G3L

■ **715008206** · Black

This kit includes:
- Can-Am ProMount Flex2 Blade
- Push Frame with Quick-Attach System
- Mounting Kit
- Plow Roller Fairlead

Can-Am ProMount Flex2 Plows

Can-Am ProMount Flex2 60" (152 cm) Blade

Fits ProMount Push Frame

715004203

- Plow blade made of UHMWPE, flexible and impact absorbing material prevents damaging your plow when accidental impacts occur.
- Replaceable wear blade.
- Large pin designed for easy blade rotation to eliminate snow buildup at pivot point.
- Blade design provides best snow roll-off at any angle.
- Compatible with Can-Am ProMount Blade accessories to further enhance plow versatility.
- Clears 54" (137 cm) when plow is fully angled.
- Blade height of 17" (43 cm).

Can-Am ProMount Flex2 66" (168 cm) Blade

Fits ProMount Push Frame

715006265

- Plow blade made of UHMWPE, flexible and impact absorbing material prevents damaging your plow when accidental impact occurs.
- Replaceable wear blade.
- Large pin designed for easy blade rotation to eliminate snow buildup at pivot point.
- Blade design provides best snow roll-off at any angle.
- Clears 60" (152 cm) when plow is fully angled.
- Blade height of 17" (43 cm).
- Compatible with Can-Am ProMount Blade accessories to further enhance plow versatility.

Can-Am ProMount Flex2 72" (183 cm) Blade

Fits ProMount Push Frame

715004485

- Plow blade made of UHMWPE, flexible and impact absorbing material prevents damaging your plow when accidental impacts occur.
- Replaceable wear blade.
- Large pin designed for easy blade rotation to eliminate snow buildup at pivot point.
- Blade design provides best snow roll-off at any angle.
- Compatible with Can-Am ProMount Blade accessories to further enhance plow versatility.
- Clears 66" (168 cm) when plow is fully angled.
- Blade height of 17" (43 cm).

Angle Plows

Can-Am ProMount Angle Blades 60" (152 cm) Steel Oneway State Blade

G3L

715007261

- Make the job easier with the right tools, clear long alleys and make the task easier by sending the snow further out of the way.
- Wing end of plow measures 25" (63 cm) high and tapers down to 17" (43 cm).
- One-way “winged” state plow designed to throw snow higher.
- Rubber Flap (715007299) designed to keep snow away from the driver is offered as accessory (sold separately).
- Can-Am branded.

Can-Am ProMount Angle Blades 66" (168 cm) Steel Oneway State Blade

G3L

715007263

- Make the job easier with the right tools, clear long alleys and make the task easier by sending the snow further out of the way.
- Wing end of plow measures 25" (63 cm) high and tapers down to 17" (43 cm).
- One-way “winged” state plow designed to throw snow higher.
- Rubber Flap (715007299) designed to keep snow away from the driver is offered as accessory (sold separately).
- Can-Am branded.

Can-Am ProMount Angle Blades 72" (183 cm) Steel Oneway State Blade

G3L

715007264

- Make the job easier with the right tools, clear long alleys and make the task easier by sending the snow further out of the way.
- Wing end of plow measures 26" (67 cm) high and tapers down to 17" (43 cm).
- One-way “winged” state plow designed to throw snow higher.
- Rubber Flap (715007299) designed to keep snow away from the driver is offered as accessory (sold separately).
- Can-Am branded.

ProMount One-Way State Blade Rubber Flap

(Not illustrated)

715007299

- Allows for more efficient snow projections in various snow conditions.

Can-Am ProMount Plow Accessories

Can-Am ProMount Push Frame with Quick-Attach System

G3L | **715004980**

- Heavy-duty steel tubes designed to withstand the roughest use.
- Mount location provides the ultimate push strength and traction.
- Designed for maximum plow lift height.
- Features a self-aligning quick-attach system, an easy foot-release pedal and an ergonomic handle for plow angle adjustment.
- Allows blade to swivel left or right in five positions.
- Compatible with all Can-Am ProMount blades.
- Plow Roller Fairlead and Plow Limit Switch recommended to extend winch cable lifespan.
- Can-Am ProMount Mounting Kit required for installation.

Can-Am ProMount Push Frame Extension

G3L | **715006257**

- 12" (30 cm) push frame extension.
- Required when plow is installed with Apache Track System.

NEW Can-Am ProMount Mounting Kit

G3L | **715009483**

- Required to install the Can-Am ProMount Push Frame with Quick-Attach System.
- 20 mm mounting rods are designed to stay in place all year round without compromising on ground clearance.
- No drilling required.
- Quick installation directly to the chassis.
- Plow Roller Fairlead included.

Can-Am ProMount Edge Markers

G3L | **715004206**

- Help locate the edges of your plow.
- Height: 24" (60 cm).
- Sold in pairs.
- Compatible with Can-Am ProMount Steel and Flex2 Blades with or without Blade Extensions (except for the Can-Am ProMount Steel 54" (137 cm) Blades).

Can-Am ProMount Drift Cutters

G3L | **715006258**

- Help keep snow in the plow.
- Dimensions: 17" x 13" (43.2 cm x 33 cm).
- Sold in pairs.
- Compatible with Can-Am ProMount Steel and Flex2 Blades with or without Blade Extensions (except for the Can-Am ProMount Steel 54" (137 cm) Blades).

Can-Am ProMount Plastic Wear Blade

G3L

715004480 • 54" (137 cm)
715004481 • 60" (152 cm)
715004482 • 66" (168 cm)

- To help prevent scratches on smooth driveways and markable surfaces.

Can-Am ProMount Curved Wear Blade

G3L

715007791 · 60" (152 cm)
715007792 · 66" (168 cm)
715007793 · 72" (183 cm)

- Wear blade designed with a folded back bottom lip.
- The increased surface allows for less digging while plowing uneven surfaces.
- Ideal for snow covered gravel, grass, paver stone and other soft surfaces.

Can-Am ProMount Plow Blade Extensions

G3L

■ **715004205** · Black
■ **715005319** · Yellow

- Add 3" (8 cm) each side.
- Compatible with Can-Am ProMount Blades (except for Can-Am ProMount Steel 54" (137 cm) Blade).
- Longer Wear Blade can be installed to further extend the extra length already provided by the extensions.
- Compatible with Can-Am ProMount Steel and Flex2 Blades (except for the Can-Am ProMount Steel 54" (137 cm) Blades).

Back Drag Blade

ProMount Plows (60" and more)

715007794

- ¼" thick steel swivel scraper.
- Lifts up when the vehicle is moving forward so as not to affect the scraping.
- Increased capacity to pull snow.
- More aggressive scraping in reverse mode.
- Lifts the blade off the ground so that it scrapes evenly.
- Adjustable in length for compatibility with 60", 66" and 72" blades.
- Compatible with ProMount blades (Flex and Steel).

Plow Roller Fairlead

G3L

705009222

- Larger diameter lower roller reduces wear on wire rope for plow application.
- Can be used with all ProMount plows.
- Included in the Can-Am ProMount Mounting Kit (715009483).

Pulley Kit for Alpine Super-Duty Plow

G3L

715000279

- Pulley kit to be used in conjunction with the winch when using a snow plow.
- Recommended to increase winch efficiency.
- To be used with the XT Front Bumper.

Plow Limit Switch
(Not illustrated)

G3L

715006319

- To control the cable tension when raising your plow system.
- Prevents winch, plow push frame and vehicle damage.

Can-Am ProMount Plow Angling System

G3L

715007801

- Converts your plow system into an easy-to-control unit from the driver's seat.
- Using one hand to control all plow motions will allow you to easily concentrate and manage your plowing tasks.
- Compatible with ProMount Blade.
- Push Frame (715004980) is required.
- Push Frame Extension (715006257) is required for installation with the Front Rancher Bumper.
- Winch and plow sold separately.

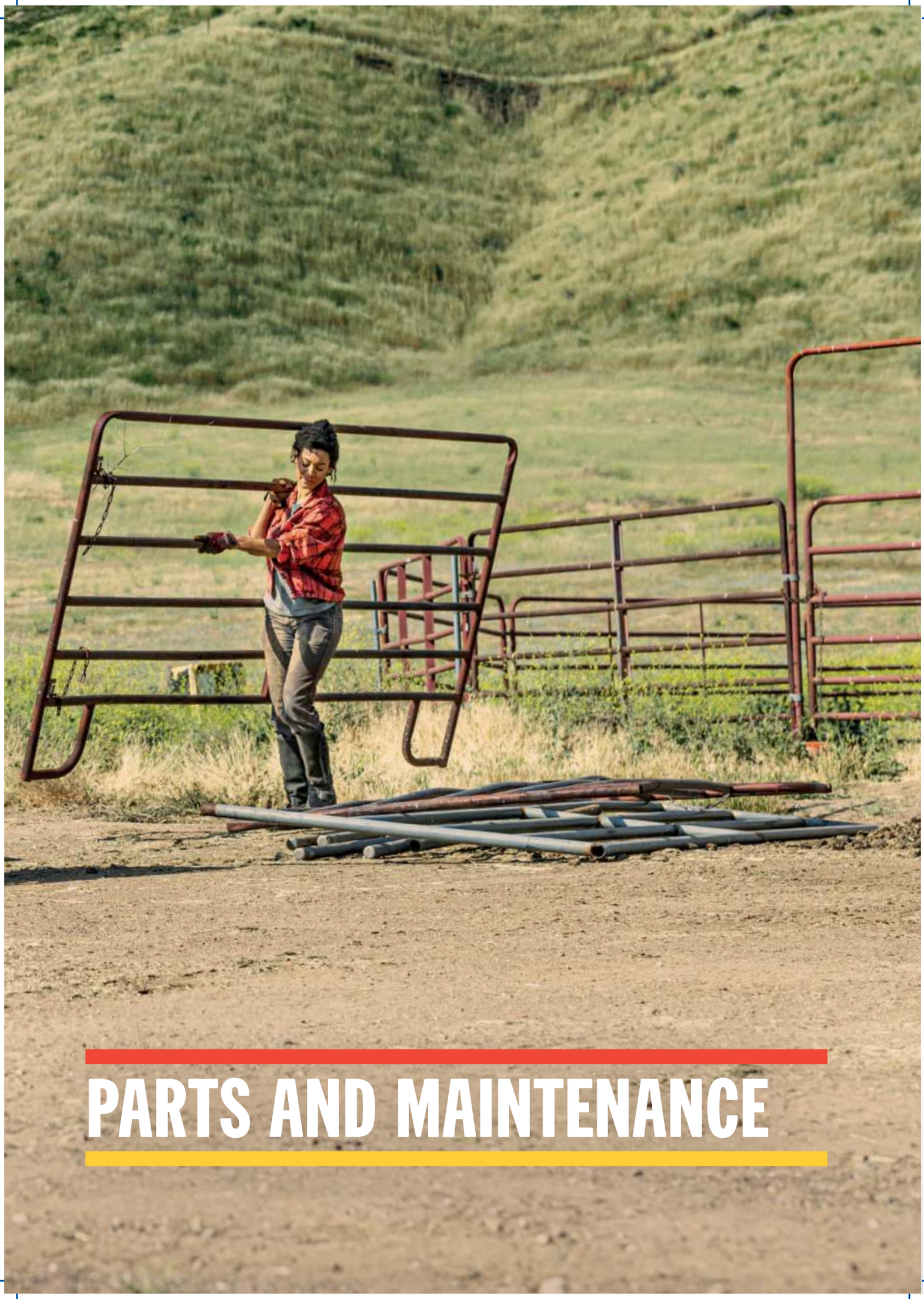

PARTS AND MAINTENANCE

PARTS AND MAINTENANCE

Keep an Eye on These Parts 108
Genuine Parts 110
XPS Tires 113
Tires & Rims 114
Lubricant & Oil Change Kit 117
Maintenance Products 118

CAN-AM
TOUGH
Trust genuine Can-Am parts to keep your vehicle performing at its best.
TWO-YEAR WARRANTY*
Precisely engineered. Rigorously tested. Factory approved.
*Covers parts and labor when fitted at an authorized dealer.

CAN-AM ATVs G2, G2L, G2S

To make sure your ATV performs as you expect, **keep an eye on these components**:**

OIL FILTER	420256188
ENGINE OIL*	
4T 10W-50 Synthetic Oil	
1 quart / 946 ml	9779234
1 US gallon / 3.785 L	9779235
4T 0W-40 Synthetic Oil	
1 quart / 946 ml	9779139
1 US gallon / 3.785 L	9779140
4T 5W-40 Synthetic Blend Oil	
1 quart / 946 ml	9779133
1 US gallon / 3.785 L	9779134
OIL CHANGE KIT*	
5W-40 Synthetic Blend Oil	
500 cc or more V-twin engine	9779258
0W-40 Synthetic Oil	
500 cc or more V-twin engine	9779259
10W-50 Synthetic Oil	
500 cc or more V-twin engine	9779252
5W-40 Synthetic Blend Oil	
450cc or less	9779256
0W-40 Synthetic Oil	
450cc or less	9779257
FUEL FILTER	709001120

AIR FILTER	
Performance Air Filter by Twin Air†	715001333
Premium Air Filter	707800371
CVT AIR FILTER	
G2S	707001786
G2, G2L	715003483
DRIVE BELT	
450 cc & less	
Premium (Stock)	422280283
500 cc & more	
Premium (Stock)	422280360
BRAKE PADS	
Metallic G2	
Front & Rear Left	715900248
Front & Rear Right	715900249
Organic G2, G2L, G2S (except X mr models)	
Front & Rear Left	715601015
Front & Rear Right	715601014

CV BOOT KITS	
G2, G2L, G2S (except X mr models)	
Front Wheel Side	705401345
Front Differential Side	705401346
Rear	705501864
X mr models	
Front Wheel Side	705401354
Front Differential Side	705401355
Rear	705501864
WHEEL BEARINGS	293350150
A-ARM BUSHING KIT	703500875
BALL JOINTS	
Upper	706202044
Lower	706202045
SPARK PLUG	
450, 850, 1000R engines	715900352
570, 650, 1000 engines	715900642
BATTERY	
G2S, G2, G2L 18 Amps. Wet (YTX20 L-BS)	296000444
DS (250, 90, 70, 50) 13 Amps. Wet (YTX16 L-BS)	V31500MAA020

* For Europe, please check correspondent PNs on page 117.
**Refer to periodic maintenance chart for proper intervals.

To make sure your ATV performs as you expect, **keep an eye on these components:**[**]

Oil Filter	420256188
Oil Filter Cover O-Ring	420230922
Drain Plug Sealing Ring	420552280
Engine Air Filter	707800846
Spark Plug	715900785
Belt for 700/HD7	420280225
Belt for 500/HD5	420280226
Front Left Brake Pad	705602070
Front/Rear Right Brake Pad	705602071
Front CV Outer Boot Kit G3L	715500456
Front CV Inner Boot Kit G3L	715500457
Rear CV Outer Boot Kit G3L	715500464
Rear CV Inner Boot Kit G3L	715500465
Wheel Bearing	293350150
Suspension Bushing	706004511
Ball Joints Lower	706202045
Ball Joints Upper	706202044
Battery	296000444
pDrive Ramp Roller Maintenance Set	420629231
pDrive Torque Roller Maintenance Set	420629225

* For Europe, please check correspondent PNs on page 117.
**Refer to periodic maintenance chart for proper intervals.

GENUINE PARTS

Oil Filters

Oil Filters	Models	Oil Filter	Sealing Ring (Oil Filter Cover)	Sealing Ring (Drain Plug)
	G2S, G2 & G2L	**420256188**	**420230923**	**420552280**
	G3L	**420256188**	**420230922**	**420552280**
	Complete Engine Oil Change Kit also available — see page 117			

Air Filters

Premium Air Filter

- Premium quality filter.
- Prevents airborne contaminants from reaching your engine.
- Protects internal components against premature wear.

Models	
G2S, G2 & G2L	**707800371**
G3L	**707800846**

Performance Air Filter by Twin Air†

- The best choice for the harshest conditions.
- Multiple staged oiled filtering foam for superior dust retaining capacity with high air flow.
- Washable and reusable.

Models	
G2S, G2 & G2L	**715001333**

CVT Air Filter
(Not illustrated)

Models	
G2, G2L	**715003483**
G2S	**707001786**
G3L	**707002886**

Spark Plug

Spark Plug

Models	
ATV 450/850/1000R	**715900352**
ATV 570/650/1000	**715900642**
ATV 500/700	**715900785**

Batteries

Yuasa† Batteries

- Top of the line models from the leading preferred original equipment battery suppliers in North America.

Models	3 A Wet (YTX4 L-BS)	10 A Wet (YTX12-BS)	18 A Wet (YTX20 L-BS)
G2S, G2 & G2L	—	—	**296000444**
G3L	—	—	**296000444**
DS 50, 70 & 90	**V31500MAA020**	—	—
Renegade 70, 110	**V31500MAA020**	—	—
DS 250	—	**715900031**	—

Axles

Premium CV Axle

- Premium quality design ideal for off-roading, heavy-duty and low speed torque usage.
- Includes CVs, shaft and boots with the best suited geometry for your Can-Am vehicle.

Models	Front Left	Front Right	Rear Left	Rear Right
G2, G2S (except X mr)	**705402235**	**705402236**	**705502710**	**705502711**
G2, G2S X mr	**705403009**	**705402238**	**705503025**	**705503024**
G2L (except 570 X mr)	**705401429**	**705401428**	**705501898**	**705501897**
G2L 570 X mr	**705401115**	**705401116**	**705501485**	**705501486**
G3L (non ABS models)	**705402251**	**705402250**	**705502928**	**705502928**
G3L (ABS models)	**705402612**	**705402613**	**705502928**	**705503078**

Brakes

Metallic Brake Pad Kit

- Built strong to last long – heavy-duty construction stands up to hard braking.
- Designed to handle demanding riding conditions with challenging braking environments such as mud and dunes.
- Created specifically for use with Can-Am vehicles.

Models	Front Left	Front Right	Rear Left	Rear Right
G2S, G2 & G2L	**715900248**	**715900249**	**715900248**	**715900249**
G3L	**705602070**	**705602071**	**N/A**	**705602071**

Please contact your dealer or visit our online store at canamoffroad.com for suggested fitment.

Parts

A-Arm Bushing Kit

G2, G2L, G2S — **703500875**

- This bushing kit includes 2 bushings, a sleeve and a wear plate, as illustrated.
- All you need to renew your suspension A-arms.

Ball Joints

Upper	**706202044**
Lower	**706202045**

- Robust design for off-road usage and sealed for prolonged durability.

Wheel Bearings
(Not illustrated)

G2, G2L, G2S, G3L — **293350150**

- Sealed bearings for additional protection from water and dirt.

CV Boot Kit

- Comes with clamps and grease.
- Genuine BRP CV Boot Kits ensure absolute compatibility and a perfect fit.

Models	Front Wheel Side	Front Differential Side	Rear Wheel Side	Rear Differential Side
G2, G2L, G2S (except X mr)	**705401345**	**705401346**	**705501864**	**705501864**
X mr	**705401354**	**705401355**	**705501864**	**705501864**
G3L	**715500456**	**715500457**	**715500464**	**715500465**

Belts

BRP Premium Drive Belt

- High-performance design ideal for off-road use.
- BRP-specific calibration adjusted to best suit your Can-Am vehicle.

Models	Premium Belt	CVT Gasket Cover
G2, G2S 450 cc & less	**422280283**	**420430126**
G2, G2S 500 cc & more	**422280366**	**420430126**
G2L Outlander 450 & Outlander MAX 450	**422280283**	**420630292**
G3L 500/HD5	**420280226**	**420630255**
G3L 700/HD7	**420280225**	**420630255**

Driven Clutch Spreader Tool
(Not illustrated)

G2, G2L, G2S, G3L — **529036098**

- Allows you to spread the secondary clutch open for easy belt replacement.

pDrive Pulley Service Kits

Ramp Roller Maintenance Set

G3L — **420629237**

pDrive Ramp Roller Set

Torque Roller Maintenance Set

G3L — **420629224**

pDrive Torque Roller Set

XPS TIRES

SHOP BY USAGE

GRAVEL & HARD PACK · ROCK · MUD

XPS Trail Force

- All-terrain radial tire.
- 8-ply rated construction.
- Versatile and suitable for many types of terrain.
- Aggressive tread pattern for better traction on dirt, mud and rocky terrains.
- Tread depth: 20 mm (0.78").

705402754 · 27X9R14
705503103 · 27X11R14
705403026 · 26X8R14
705503322 · 26X10R14

XPS Trail King

- All-terrain radial tire.
- 8-ply rated construction.
- Aggressive tread pattern for tougher terrains.
- An almost continuous center tread offers a smoother trail ride.
- Tread depth: 26 mm (1.02").

705402825 – 28X9R14
705403081 – 27X9R14
705503181 – 28X11R14
705503355 – 27X11R14
705402713 – 26X8R12
705503073 – 26X10R12

XPS Trac Force

- All-terrain light truck style radial tire.
- 8-ply rated construction.
- Central tread for good grip and comfort on compact terrain.
- Tread depth: 18 mm (0.71").

705403080 – 30X9R14
705503354 – 30X10R14
705403416 – 32X10R16

XPS Hammer Force

- Light truck-inspired tire.
- 8-ply rated construction.
- Rock-crawling tread pattern with unique contact patch.
- Aggressive sidewall for maximum traction when faced with technical terrains.
- Tread depth: 15 mm (0.59").

705402918 – 30X10R15

XPS Swamp Force

- Hybrid radial tire for mud and trail.
- 8-ply rated construction.
- Unique tread pattern allowing good grip in mud and mud ejection.
- Center tread provides for comfortable trail riding.
- Tread depth: 36-38 mm (1.41"-1.49").

705403201 – 30X9R14
705503387 – 30X11R14

XPS Swamp King

- Bias tires for mud and trail.
- 6-ply rated construction.
- Ultimate performance in mud without sacrificing good trail handling.
- Tread depth: 38 mm (1.49").

705403028 – 28X8X14
705503324 – 28X10X14

TIRES & RIMS

Tires

Carlisle ACT Tire

G2 (500-1000 XT models only)

705401333 · Front
705401334 · CE

705501769 · Rear
705501770 · CE

- Front - 26" x 8" x 12".
- Rear - 26" x 10" x 12".

Carlisle ACT Tire

G2 (400 XT models only)

705400606 · Front
705400326 · CE

705500598 · Rear CE

- Front - 25" x 8" x 12".
- Rear - 25" x 11" x 12".

Carlisle ACT HD Tire

705402562 · Front

705502940 · Rear

- Front - 26" x 8" x 12".
- Rear - 26" x 10" x 12".

Carlisle Badlands A/R Tire

G2 (500-1000 Base models only)

705401331 · Front
705401332 · CE

705501767 · Rear
705501768 · CE

- Front - 26" x 8" x 12".
- Rear - 26" x 10" x 12".

Carlisle Trail Wolf Tire

G2 (400 Base models only)
G2L (450/570)

705402890 · Front
705400607 · CE

705503225 · Rear
705502165 · CE

- Front - 25" x 8" x 12".
- Rear - 25" x 11" x 12".

ITP TerraCross Tire

G2 XTP, G2Limited

705402973 · Front

705502858 · Rear

- This smooth-riding tire will command every bit of traction from the ground while still managing to float across loose snow, sand and mud.
- Features extreme-duty construction for improved puncture protection and extra-tough rubber compound for increased tread life. The interlocking tread pattern and wide footprint make it one of the toughest and grippiest radials around.
- Not EC compliant.
- Front - 26" x 8" x 14".
- Rear - 26" x 10" x 14".

ITP Holeshot ATR Tire	G2S	**705400600** · Front **705400475** · CE **705500926** · Rear **705500820** · CE

- Front - 205/80R12 - 25" x 8" x 12".
- Rear - 270/60R12 - 25" x 10" x 12".

ITP Mega Mayhem	G2 X mr 570 & 650 2018 & up G2S X mr 570 2018 & up	**705402131** · Front **705502645** · Rear

- 1.5" tread depth mud thrower tires.
- Surprisingly smooth ride on hard pack surfaces.
- 6-ply rated.
- Front - 28" x 9" x 12".
- Rear - 28" x 11" x 12".

ITP Cryptid Tire	G2 X mr 850 & 1000R 2018 & up G2S X mr 1000R 2018 & up	**705402671**

- Graduated lug height and paddle-like shoulder configuration provide maximum side bite for climbing in and out of the mud without compromising ride comfort on trails and hard pack.
- 6-ply rated.
- 30" x 9" x 14".

Gorilla Silverback Tire	G2 (850 & 1000 models only)	**705401501**

- AT30X9-14 Gorilla Silverback mud tire.
- Sold individually.
- Not EC compliant.
- 30" x 9" x 14".

Maxxis Mudzilla Tire	G2 (X mr 570 & 650 models only)	**705501836** · Rear

- Not EC compliant.
- Rear - 28" x 10" x 12".

Kenda Klaw MXR Tire	DS 90 X	**V42711DGF01HLL** · Front **V42712DGF01HLL** · Rear

- Front - 20" x 6" x 10".
- Rear - 18" x 10.5" x 8".

Rims

14" Rim	G2 DPS, G2 XT, G2 MAX 650, G2 MAX XT, G2 MAX Limited	**705401853** · Front **705401852** · Front **705401851** · Front **705502402** · Rear **705502401** · Rear **705502400** · Rear	■ Black and machined ■ Black with clear coat ■ Silver with clear coat ■ Black and machined ■ Black with clear coat ■ Silver with clear coat

- Premium cast aluminum black painted with machining and clear coat rim.
- Center hole: 72 mm.
- Bolt circle pattern: 4/136 mm.
- Front - 14" x 6.5" offset = 40 mm.
- Rear - 14" x 8.5" offset = 50 mm.

Note: Matching Nuts - 250100100 Black, 250100082 Chrome/Matching Cap - 705400928

14" Rim	G2 DPS, G2 XT, G2 MAX Limited, G2 North Edition, G2 MAX North Edition	**705402309** · Front **705402222** · Front **705402307** · Front **705502770** · Rear **705502702** · Rear **705502768** · Rear	Black and machined Black with clear coat Silver with clear coat Black and machined Black with clear coat Silver with clear coat

- Front - 14" x 6.5" offset = 40 mm.
- Rear - 14" x 8.5" offset = 50 mm.

Outlander X mr Rim	X mr models front and rear wheels	**705401848** · Front **705401849** · Front	Black and machined Black

- Cast aluminum rim with trend setting explosive styling so you can ride—and look—like a trailblazer.
- Front - 14" x 6.5" offset = 10 mm.

Note: Matching Nuts - 250100100 Black, 250100082 Chrome/Matching Cap - 705401541

Outlander Rim (Camo Model)	G2, G2L, G2S	**705401127** · Front **705501493** · Rear	Black with clear coat Black with clear coat

- Black with clear coat aluminum rim.
- Front - 12" x 6" offset = 41 mm.
- Rear - 12" x 7.5" offset = 51 mm.

12" Beadlock Rim	G2, G2L, G2S	**705401678** · Front **705502244** · Rear	Black Black

- Black with clear coat aluminum rim.
- Needs 16 bolts (250000787) for installing the beadlock.
- Choice of beadlock color (not included).
- Front - 12" x 6" offset = 41 mm.
- Rear - 12" x 7.5" offset = 51 mm.

12" Beadlock Ring	G2, G2L, G2S	**705401763** · Can-Am Red **705401810** · Yellow **705401811** · Orange Crush

- Cast aluminum beadlock.
- Must be installed on Front Rim (705401678) and Rear Rim (705502244).

Note: Matching Nuts - 250100184 Black, 250100185 Chrome/Matching Cap - 705400928

14" Beadlock Rim	G2	**705401594** · Front **705503191** · Rear	Black Black

- Black with clear coat aluminum rim.
- Choice of beadlock color (not included).
- Needs 16 bolts (250000787) for installing the beadlock.
- Front - 14" x 6.5" offset = 41 mm.
- Rear - 14" x 8" offset = 51 mm.

14" Beadlock Ring	G2	**705401586** · Manta Green **705401702** · Octane Blue	**705401837** · Can-Am Red **705401840** · Black

- Cast aluminum beadlock.
- Must be installed on Front Rim (705401594) and Rear Rim (705503191).

Note: Matching Nuts - 250100184 Black, 250100185 Chrome/Matching Cap - 705400928

LUBRICANT & OIL CHANGE KIT

Lubricant

XPS 4T 10 W-50 Synthetic Oil

9779234 (US) · 1 qt / 946 ml
9779240 (EU) · 1 qt / 946 ml
9779235 (US) · 1 US gal / 3.785 L

+50° C
+122° F
-25° C
-13° F

- Engineered for heavy-duty and high-performance 4-stroke engines, including turbocharged, supercharged and racing engines.
- Formulated using carefully selected and strenuously tested base stocks and custom additives.
- Offers thick film strength to protect bearings, and a proven high-temp detergency to minimize deposits, prevent shear, provide thermal stability, and combat fuel dilution to ensure maximum performance from your engine.

XPS 4T 0 W-40 Synthetic Oil

9779139 (US) · 1 qt / 946 ml
9779286 (EU) · 1 qt / 946 ml
9779140 (US)· 1 US gal / 3.785 L
9779287 (EU) · 1 US gal / 3.785 L

+40° C
+104° F
-45° C
-49° F

- Powersport formula with premium anti-wear and anti-corrosion additives.
- The best choice for high-performance snowmobile, ATV and SXS 4-stroke engines used in cold weather.
- Provides superior engine and transmission protection against heat, rust and corrosion.
- Delivers optimal performance in high and low temperatures.

XPS 4T 5 W-40 Synthetic Blend Oil

9779133 (US)· 1 qt / 946 ml
9779290 (EU) · 1 qt / 946 ml
9779134 (US)· 1 US gal / 3.785 L
9779291 (EU) · 1 US gal / 3.785 L

+40° C
+104° F
-35° C
-31° F

- Off-road formula with premium anti-wear and anti-corrosion additives.
- Designed for high-performance off-road, on-road and PWC 4-stroke engines, including turbo or supercharged powersports engines.
- Provides superior engine and transmission protection against rust and corrosion, even in extreme conditions.

Oil Change Kit

Engine Oil Change Kit

- Ultra-convenient “all-in-one” Engine Oil Change Kit saves time and money.
- Includes XPS Synthetic or Synthetic Blend Oil, oil filter, O-rings and washer.

Models	
5W-40 Synthetic Blend Oil / 450 cc or less	**9779256** (US) **9779408** (EU)
0W-40 Synthetic Oil / 450 cc or less	**9779257** (US) **9779409** (EU)
5W-40 Synthetic Blend Oil / 500 cc or more V-twin engine	**9779258** (US) **9779405** (EU)
0W-40 Synthetic Oil / 500 cc or more V-twin engine	**9779259** (US) **9779406** (EU)
10W-50 Synthetic Oil / 500 cc or more V-twin engine	**9779252** (US) **9779401** (EU)
0W-40 Synthetic Oil / 650 ACE	**9779481** (US) **9779417** (EU)
5W-40 Synthetic Blend Oil / 900 ACE	**9779260** (US) **9779410** (EU)
10W-50 Synthetic Oil / 900 ACE	**9779261** (US) **9779411** (EU)

MAINTENANCE PRODUCTS

Synthetic Gear Oil

75W-90	**9779158** (US) · 1 qt / 946 ml **9779212** (EU) · 1 qt / 946 ml
75W-140	**9779160** (US) · 1 qt / 946 ml **9779215** (EU) · 1 qt / 946 ml

- Uses custom additives to provide the best performance in Visco-Lok™ and Smart-Lok™ differentials.
- Allows higher loads, superior shear stability and reduced oxidation.
- Exceptional wear protection and superior performance at all operating temperatures.

Extended Life Pre-Mixed Coolant

9779150 · 1 qt / 946 ml
619590728 (Scandinavia) · 1 qt / 946 ml

- Antifreeze/coolant contains the correct dilution and the necessary additives to prevent corrosion and inhibit cavitation in BRP cooling systems.
- Long-life, 5-year formula specially formulated for BRP vehicles.
- Superior heat transfer.
- Ideal replacement for vehicles that normally use a 2-year antifreeze/coolant (green).
- 5 years (orange).

Anti-Corrosive Lubricant

9779167
619590724 (Scandinavia)
• 12 oz / 340 g

- Multipurpose lubricant that can also be used to prevent rust, corrosion and moisture intrusion.
- It contains extreme pressure additives that work as an all-around lubricant for just about anywhere lubrication is needed.

Extreme Duty Suspension Grease

(Not Illustrated)

9779708 · 14 oz / 400 g

- Designed to work specifically with the components found in Can-Am vehicle suspensions.
- It is highly stable and offers optimal lubrication at both extreme cold and high temperatures while protecting suspension components from dirt and moisture, as well as corrosion under extreme washout conditions.

XPS Spline Grease

(Not Illustrated)

9779704 (US) · 4 fl oz / 118 ml
9779472 (EU) · 4 fl oz / 118 ml

- Enhanced rust and corrosion resistance.
- Protects against seizure, heat-freeze, galling, rust and corrosion.

DOT 4 Brake Fluid

9779151 (US) · 12 fl oz / 355 ml
9779207 (EU) · 12 fl oz / 355 ml

- Meets or exceeds all DOT3 and DOT4 brake fluid requirements.
- High-temperature formula resists fade and also conditions seals and O-rings in braking system.

Racing Brake Fluid RS600

9779152 · 12 fl oz / 355 ml

- Exceeds DOT4 brake fluid requirements for extreme conditions and competition use.
- Extreme, 579-degree boiling point temperature is ideal for high-demand competition conditions to combat brake fade.
- Will not harm seals or braking system components.
- Should be added only to a clean/unfilled system to avoid dilution and diminished performance.
- Low-moisture formula slows water vapor absorption through multiple heat cycles.
- Recommended for use in Ski-Doo and Can-Am racing applications.

Fuel Stabilizer

9779171 (US) · 8 fl oz / 236 ml
9779183 (EU) · 8 fl oz / 236 ml

- Ethanol-compatible and will stabilize fuel in your tank to keep it from breaking down and causing hard starting, throttle hesitation and poor run quality.
- Since ethanol attracts moisture, this product contains powerful anti-corrosion additives to protect fuel system components.
- Prevents problems associated with E10 fuels.

BRP REIMAGINES THE WAY YOU ACCESS YOUR WORLD

Can-Am is one of many success stories from BRP, the global company
behind some of the most daringly innovative products and experiences that move you.
Because it's not about the destination, it's about the journey — yours.

Discover our brands:

ski-doo LYNX SEA-DOO can-am ROTAX ALUMACraft MANITOU QUINTREX

www.brp.com

CANAMOFFROAD.COM
A BRP BRAND
BRP
can-am